Zoning Resolution

THE CITY OF NEW YORK
Eric Adams, Mayor

CITY PLANNING COMMISSION
Daniel R. Garodnick, Chair

Chapter 1 - Special Midtown District (MiD)

File generated by https://zr.planning.nyc.gov on 6/21/2023

Chapter 1 - Special Midtown District (MiD)

81-00 - GENERAL PURPOSES

LAST AMENDED
8/9/2017

The “Special Midtown District” established in this Resolution is designed to promote and protect public health, safety and general welfare. These general goals include, among others, the following specific purposes:

(a) to strengthen the business core of Midtown Manhattan by improving the working and living environments;

(b) to stabilize development in Midtown Manhattan and provide direction and incentives for further growth where appropriate;

(c) to control the impact of buildings on the access of light and air to the streets and avenues of Midtown;

(d) to link future Midtown growth and development to improved pedestrian circulation, improved pedestrian access to rapid transit facilities, and avoidance of conflicts with vehicular traffic;

(e) to preserve the historic architectural character of development along certain streets and avenues and the pedestrian orientation of ground floor uses, and thus safeguard the quality that makes Midtown vital;

(f) to continue the historic pattern of relatively low building bulk in midblock locations compared to avenue frontages;

(g) to improve the quality of new development in Midtown by fostering the provision of specified public amenities in appropriate locations;

(h) to preserve, protect and enhance the character of the Theater Subdistrict as the location of the world's foremost concentration of legitimate theaters and an area of diverse uses of a primarily entertainment and entertainment-related nature;

(i) to strengthen and enhance the character of the Eighth Avenue Corridor and its relationship with the rest of the Theater Subdistrict and with the Special Clinton District;

(j) to create and provide a transition between the Theater Subdistrict and the lower-scale Clinton community to the west;

(k) to preserve, protect and enhance the scale and character of Times Square, the heart of New York City's entertainment district, and the Core of the Theater Subdistrict, which are characterized by a unique combination of building scale, large illuminated signs and entertainment and entertainment-related uses;

(l) to preserve, protect and enhance the character of Fifth Avenue as the showcase of New York and national retail shopping;

(m) to preserve the midblock area north of the Museum of Modern Art for its special contribution to the historic continuity, function and ambience of Midtown;

(n) to protect and strengthen the economic vitality and competitiveness of the East Midtown Subdistrict by facilitating the development of its exceptional and sustainable buildings and enabling improvements to the pedestrian and mass transit circulation network;

(o) to ensure that development within the East Midtown Subdistrict occurs on sites that meet sound site planning criteria and therefore can accommodate additional density as appropriate;

(p) to protect and strengthen the role of landmark buildings as important features of the East Midtown Subdistrict;

(q) to protect and enhance the role of Grand Central Terminal as a major transportation hub within the City, to expand and enhance the pedestrian and mass transit circulation network connecting Grand Central Terminal to surrounding development, to minimize pedestrian congestion and to protect the surrounding area’s special character;

(r) to expand the retail, entertainment and commercial character of the area around Pennsylvania Station and to enhance its role as a

major transportation hub in the city;

(s) to provide freedom of architectural design within limits established to assure adequate access of light and air to the street, and thus to encourage more attractive and economic building forms without the need for special development permissions or "negotiated zoning"; and

(t) to promote the most desirable use of land and building development in accordance with the District Plan for Midtown and thus conserve the value of land and buildings and thereby protect the City's tax revenues.

81-01 - Definitions

LAST AMENDED
8/9/2017

For purposes of this Chapter, matter in italics is defined in Sections 12-10, 81-261, 81-271 or 81-613 (Definitions).

81-02 - General Provisions

LAST AMENDED
8/9/2017

81-021 - Applicability of underlying district regulations

LAST AMENDED
10/7/2021

Except as modified by the express provisions of this Chapter, the regulations of the underlying districts remain in effect.

The regulations of the districts set forth below are applicable in the following Midtown districts unless modified by this Chapter:

Midtown Districts	Districts Whose Regulations Apply
C5P C5-2.5	C5-2
C6-4.5	C6-4
C6-5.5	C6-5
C6-6.5	C6-6
C6-7T	C6-7

For #transit-adjacent sites# or #qualifying transit improvement sites#, as defined in Section 66-11 (Definitions), in the event of a conflict between the provisions of this Chapter and the provisions of Article VI, Chapter 6 (Special Regulations Applying Around Mass Transit Stations), the provisions of Article VI, Chapter 6 shall control.

81-022 - Applicability of Special Transit Land Use District regulations

LAST AMENDED

Except as otherwise provided in paragraphs (a), (b) or (c) of this Section, wherever the #Special Transit Land Use District# includes an area which also lies within the #Special Midtown District#, as designated on the #zoning map# by the letters "MiD-TA", the requirements of the #Special Transit Land Use District#, as set forth in Article IX, Chapter 5, shall apply.

(a) However, the requirements of Article IX, Chapter 5, shall be waived where the City Planning Commission certifies, in the case of a specific #development# otherwise subject to those requirements, that:

(1) the developer has agreed in a writing recorded against the property to implement a plan approved by the Commission and New York City Transit for off-street relocation of a subway stair entrance, in accordance with the requirements of Section 81-46 (Off-street Relocation or Renovation of a Subway Stair); or

(2) the developer has agreed in a writing recorded against the property to implement a plan approved by the Commission and New York City Transit for the provision of a #mass transit station# improvement in accordance with the provisions of Section 66-51 (Additional Floor Area for Mass Transit Station Improvements).

(b) Where the requirements of Article IX, Chapter 5, are not waived, modifications of the underlying district #bulk# regulations as set forth in this Chapter shall prevail over any inconsistent #bulk# regulations in Article IX, Chapter 5.

(c) In the East Midtown Subdistrict, the provisions of paragraph (c) of Section 81-673 (Mass transit access) shall supersede the provisions of Sections 95-031 (Selection of transit easement) and 95-052 (Special access facilities for persons with disabilities).

81-023 - Applicability of Special Clinton District regulations

LAST AMENDED
8/6/1998

Wherever the #Special Midtown District# includes an area which also lies within the #Special Clinton District#, the regulations of the #Special Clinton District# as set forth in Article IX, Chapter 6, shall also apply. In the event of any conflict or discrepancy between the regulations, the more restrictive regulations shall apply in accordance with Section 11-22 (Application of Overlapping Regulations).

The portion of the #Special Clinton District# within the #Special Midtown District# includes the area bounded by a line 150 feet west of Eighth Avenue, West 45th Street, Eighth Avenue and West 42nd Street. The area is designated on the #zoning maps# by the letters CL-MiD.

81-024 - Integration clauses

LAST AMENDED
10/31/2001

(a) The underlying zoning districts shall be deemed to be integral parts of the #Special Midtown District#. If the underlying zoning district of any #zoning lot# shall be amended or shall be nullified by any court of competent jurisdiction, such amendment or adjudication shall be construed to amend the #Special Midtown District# to remove such #zoning lot# from the #Special Midtown District# whereupon the regulations of the prior underlying district shall apply.

(b) The #bulk# regulations contained in Sections 81-20 through 81-28, inclusive, shall be deemed to be an integral unit and no modification thereof shall be permitted, except in accordance with the provisions of Section 200 of the New York City Charter. If any sentence, clause, paragraph or part of Sections 81-20 through 81-28, inclusive, shall be adjudged by any court of competent jurisdiction to be invalid, such judgment shall not be confined in its operation to the sentence, clause, paragraph or part thereof directly involved in the controversy in which such judgment shall have been rendered, but shall also be construed to invalidate and prohibit the application of the remainder of Sections 81-20 through 81-28, inclusive. However, any such judgment shall not act to invalidate any other sentence, paragraph, clause, section or chapter of the Zoning Resolution.

81-03 - District Plan

LAST AMENDED
8/9/2017

The regulations of this Chapter are designed to implement the #Special Midtown District# Plan.

The District Plan includes the following maps:

Map 1 Special Midtown District and Subdistricts

Map 2 East Midtown Subdistrict and Subareas

Map 3 Retail and Street Wall Continuity

Map 4 Subway Station and Rail Mass Transit Facility Improvement Areas

The maps are located in Appendix A of this Chapter and are hereby incorporated and made a part of this Resolution. They are incorporated for the purpose of specifying locations where special regulations and requirements set forth in the text of this Chapter apply.

81-04 - Subdistricts and Subareas

LAST AMENDED
8/9/2017

In order to carry out the purposes and provisions of this Chapter, five special Subdistricts are established within the #Special Midtown District#. In each of these Subdistricts certain special regulations apply which do not apply in the remainder of the #Special Midtown District#. The Subdistricts are outlined on Map 1 (Special Midtown District and Subdistricts) in Appendix A of this Chapter.

The Subdistricts, together with the Sections of this Chapter specially applying to each, are as follows:

Subdistricts	Sections Having Special Application
Penn Center Subdistrict	81-50
East Midtown Subdistrict	81-60
Theater Subdistrict	81-70
Fifth Avenue Subdistrict	81-80
Preservation Subdistrict	81-90

The Subdistricts are also subject to all other regulations of the #Special Midtown District# and, where applicable pursuant to Section 81-023, the #Special Clinton District# and the underlying districts, except as otherwise specifically provided in the Subdistrict regulations themselves.

Within the East Midtown Subdistrict, certain special regulations apply to Subareas that do not apply within the remainder of the Subdistrict. These Subareas are established, as follows:

Grand Central Transit Improvement Zone Subarea

Northern Subarea

Other Transit Improvement Zone Subarea

Park Avenue Subarea

Southern Subarea

Vanderbilt Corridor Subarea

The entirety of the Vanderbilt Corridor Subarea and the Grand Central Transit Improvement Zone Subarea as well as the portions of the Other Transit Improvement Zone Subarea south of East 47th Street, are hereinafter referred to as the Grand Central Core Area.

These Subareas, as well as the boundary of the Grand Central Core Area, are shown on Map 2 (East Midtown Subdistrict and Subareas) in Appendix A of this Chapter.

81-05 - Applicability of Certain Amendments

LAST AMENDED
4/28/1988

For #developments#, #enlargements# or other alterations within the #Special Midtown District#, any building permits issued by the Department of Buildings prior to April 28, 1988, shall continue in effect through May 12, 1988. Thereafter any #non-conformance# or #non-compliance# with the Zoning Resolution as so amended shall be subject to the provisions of Section 11-33 (Building Permits for Minor or Major Development or Other Construction Issued before Effective Date of Amendment).

81-06 - Applicability of Article VII Provisions

LAST AMENDED
8/26/1992

81-061 - Applicability of Article VII

LAST AMENDED
3/22/2016

Within the #Special Midtown District#, the following provisions regarding special permits by the Board of Standards and Appeals for #non-complying# #buildings# shall not be applicable:

Section 73-621 (Enlargement, change of use, or extension within buildings containing residential uses)

Section 73-63 (Enlargement of Non-residential Buildings)

Section 73-64 (Modifications for Community Facility Uses)

Within the #Special Midtown District#, the following provisions regarding special permits by the Board of Standards and Appeals shall only be applicable as modified below:

Section 73-16 (Public Transit, Railroad or Electrical Utility Substations) shall be applicable subject to the provisions of the #Special Midtown District#.

Section 73-28 (Newspaper Publishing) shall be applicable subject to the provisions of the #Special Midtown District#.

Section 73-51 (Modification of Supplementary Use Regulations) shall be applicable subject to the height and setback or alternate height and setback regulations of the #Special Midtown District#.

Section 73-52 (Modifications for Zoning Lots Divided by District Boundaries) shall be applicable subject to the height and setback or alternate height and setback regulations of the #Special Midtown District#.

81-062 - Applicability of Article VII, Chapter 4

LAST AMENDED
8/6/1998

Within the #Special Midtown District#, the following provisions regarding special permits by the City Planning Commission shall not be applicable:

Section 74-72 (Bulk Modification)

Section 74-74 (General Large-scale Development)

Section 74-75 (Educational Construction Fund Projects)

Section 74-82 (Through Block Arcades)

Section 74-83 (Court Houses)

Section 74-841 (Developments in certain Commercial Districts)

Section 74-852 (Height and setback regulations for zoning lots divided by district boundaries)

Section 74-87 (Covered Pedestrian Space)

Section 74-91 (Modification of Public Plazas)

Section 74-95 (Modifications of Housing Quality Special Permits)

Within the #Special Midtown District#, the following provisions regarding special permits by the City Planning Commission shall only be applicable as modified below:

Section 74-71 (Landmark Preservation) shall be applicable subject to the height and setback modifications of Sections 81-067, 81-254, 81-266 and 81-277

Section 74-79 (Transfer of Development Rights From Landmark Sites) shall be applicable subject to modifications of the conditions and limitations on transfer of #floor area# (see Sections 81-212 and 81-747), the meaning of the term "adjacent lot" (see Section 81-747) and the provisions relating to height and setback variations (see Sections 81-254, 81-266 and 81-277).

81-063 - Regulations for developments or enlargements on lots divided by district boundaries, within or partially within the Theater Subdistrict

LAST AMENDED
8/6/1998

Within the Theater Subdistrict of the #Special Midtown District#, the provisions of Article VII, Chapter 7 (Special Provisions for Zoning Lots Divided by District Boundaries), are modified in part by the provisions of Section 81-746 (Additional provisions for zoning lots divided by district or subdistrict core boundaries).

81-064 - Inapplicability of provisions for height and setback modifications in large-scale residential developments

LAST AMENDED
8/26/1992

Within the #Special Midtown District#, the provisions of Article VII, Chapter 8 (Special Regulations Applying to Large-scale Residential Developments), permitting the City Planning Commission to authorize the location of #buildings# without regard for height and setback

regulations shall be inapplicable.

81-065 - Inapplicability of provisions for height and setback modifications in large-scale community facility developments

LAST AMENDED
8/26/1992

Within the #Special Midtown District#, the provisions of Article VII, Chapter 9 (Special Regulations Applying to Large-scale Community Facility Developments), permitting the City Planning Commission to authorize the location of #buildings# without regard for height and setback regulations shall be inapplicable.

81-066 - Special permit modifications of Section 81-254, Section 81-40 and certain Sections of Article VII, Chapter 7

LAST AMENDED
10/7/2021

(a) The City Planning Commission, by special permit, for #zoning lots# where the #lot area# is at least 60,000 square feet or that occupy an entire #block#, may permit modification of the mandatory district plan elements of Section 81-40 or the provisions of Article VII, Chapter 7, that determine the distribution of permitted #floor area# on such #zoning lots# and, in conjunction with such modifications, may also modify the applicable #yard# and #court# requirements. However, no exception to the #street wall# or retail continuity requirements shall be permitted on Fifth Avenue or within 50 feet of Fifth Avenue within the #Special Midtown District#.

The modifications shall be subject to the following findings:

(1) that the modifications of mandatory plan elements, #floor area# allocation or #rear yard# and #court# regulations, result in a better arrangement of required facilities or in better site planning on a uniquely large #zoning lot#;

(2) that a substantial majority of the #zoning lot# is either vacant at the time of certification for review, pursuant to Section 197-c of the New York City Charter, or contains #buildings# that will be integrally related to #developments#, both physically and programmatically;

(3) that the design, scale and location of the new #buildings# or #enlarged# #buildings# are compatible with the character of the surrounding area and existing #buildings# to remain on the #zoning lot#;

(4) that such modifications will not unduly obstruct the access of light and air to surrounding properties;

(5) that any adverse impact on retail continuity is minimized by a site plan that requires pedestrian-oriented #uses# along the boundaries of any open or enclosed public areas on the #zoning lot#;

(6) that such modifications of mandatory plan elements or #floor area# allocation are consistent with the basic strategy of the #Special Midtown District# and the purposes of the Mandatory District Plan Elements.

(b) For #developments# or #enlargements# on a #zoning lot# with a #lot area# of at least 60,000 square feet located wholly or partially in the Penn Center Subdistrict, which have been granted a #floor area# bonus for subway station and/or rail mass transit facility improvements pursuant to Section 81-541, the Commission may permit modifications of the mandatory district plan elements of Section 81-40, the height and setback regulations of 81-26 and 81-27, or the provisions of Article VII, Chapter 7 (Special Provisions for Zoning Lots Divided by District Boundaries), that determine the distribution of permitted #floor area# on such #zoning lots# and, in conjunction with such modifications, may also modify the applicable #yard# and #court# requirements subject to the following findings:

(1) the modifications of mandatory plan elements, #floor area# allocation or #rear yard# and #court# regulations result in a better arrangement of required facilities or in better site planning on a uniquely large #zoning lot#;

(2) the design, scale and location of the new #buildings# or #enlarged# #buildings# are compatible with the character of the surrounding area and existing #buildings# to remain on the #zoning lot#;

(3) such modifications will not unduly obstruct the access of light and air to surrounding properties;

(4) any adverse impact on retail continuity is minimized by a site plan that requires pedestrian-oriented #uses# along the boundaries of any open or enclosed public areas within the #zoning lot#;

(5) such modifications of mandatory plan elements or #floor area# allocation are consistent with the basic strategy of the #Special Midtown District# and the purposes of the Mandatory District Plan Elements;

(6) the improvements to the below-grade pedestrian circulation network provided by the #development# or #enlargement# significantly increase public accessibility to and from subway stations and/or rail mass transit facilities in and around Pennsylvania Station; and

(7) the modifications of height and setback regulations:

(i) are necessary due to the constraints or conditions of the #development# or #enlargement# and conditions imposed by the configuration of the site; and

(ii) will provide an appropriate distribution of #bulk# on the #zoning lot# with due consideration of the basic strategy of the #Special Midtown District# and the purpose of the District's height and setback regulations. In considering whether such distribution of #bulk# is appropriate, the Commission shall consider a complete daylight evaluation for the proposed design.

The Commission may prescribe appropriate conditions and safeguards to minimize adverse effects on the character of the surrounding area.

81-067 - Modification of provisions for minimum base height and street wall location in Historic Districts

LAST AMENDED
8/9/2017

Within the Special Midtown District, for any #zoning lot# located in a Historic District designated by the Landmarks Preservation Commission, any applicable provisions relating to minimum base height and #street wall# location requirements as modified in Sections 81-43 (Street Wall Continuity Along Designated Streets), 81-671 (Special street wall requirements) pertaining to the East Midtown Subdistrict, 81-75 (Special Street Wall and Setback Requirements) pertaining to the Theater Subdistrict, 81-83 (Special Street Wall Requirements) pertaining to the Fifth Avenue Subdistrict, and 81-90 (SPECIAL REGULATIONS FOR PRESERVATION SUBDISTRICT) pertaining to mandatory #street walls# may be modified pursuant to Sections 23-66 and 35-65 (Height and Setback Regulations for Quality Housing Buildings).

81-10 - USE REGULATIONS

LAST AMENDED
8/9/2017

81-11 - Modifications of Use Regulations in Subdistricts

LAST AMENDED
8/9/2017

The #use# regulations of the underlying districts are modified in:

(a) the East Midtown Subdistrict in accordance with the provisions of Section 81-62 (Special Use Provisions), inclusive;

(b) the Theater Subdistrict in accordance with the provisions of Sections 81-72 (Use Regulations Modified) and 81-73 (Special Sign and Frontage Regulations); and

(c) the Fifth Avenue Subdistrict in accordance with the provisions of Section 81-82 (Special Regulations on Permitted and Required Uses).

81-12 - Special Retail Continuity Requirements

LAST AMENDED
5/13/1982

Special requirements for allocation of frontage to retail and service #uses# along designated #streets# are set forth in Section 81-42 (Retail Continuity Along Designated Streets).

81-13 - Special Permit Use Modifications

LAST AMENDED
5/13/1982

No special permits shall be issued by the Board of Standards and Appeals for #automotive service stations# pursuant to Section 73-21 for any #zoning lots# with frontage on any of the #streets# designated in Sections 81-42 (Retail Continuity Along Designated Streets) or 81-43 (Street Wall Continuity Along Designated Streets).

No other special permit #use# within the #Special Midtown District# shall be granted by the Board of Standards and Appeals pursuant to Section 73-10 (SPECIAL PERMIT USES) or by the City Planning Commission pursuant to Section 74-30 (SPECIAL PERMIT USES) without a finding that such special permit #use# will be consistent with the purposes and provisions of this Chapter.

81-14 - Modification of Sign and Frontage Regulations in the Fifth Avenue Subdistrict

LAST AMENDED
4/28/1988

81-141 - Special sign regulations

LAST AMENDED
6/23/2005

(a) For all existing and new #uses# in the Fifth Avenue Subdistrict, #signs# shall not be permitted on the exterior of any #building# below a level of 10 feet above #curb level#. The aggregate #surface area# of all #signs# in ground floor windows is restricted to not more than one-third of the window area.

Any #sign# that does not comply with the provisions of this paragraph, (a), shall be terminated, except that a #sign# which the Chairperson of the City Planning Commission certifies is an integral part of the #building#, shall not be required to terminate.

(b) In a C5-3 District within the Fifth Avenue Subdistrict, the Chairperson of the City Planning Commission may, by certification, modify the requirements of Section 32-655 (Height of signs in all other Commercial Districts), to allow a single non-#illuminated sign# per #building#, other than an #advertising sign#, to be located at a height between 25 and 50 feet above #curb level#, provided that the permitted #sign# shall:

(1) be limited to one name and/or address of the #building# or the name of an establishment located therein, consisting only of individual letters and/or numbers not exceeding 18 inches in height;

(2) not be within a frame, a border, or any kind of background other than the #building# facade;

(3) not project more than three inches from the facade of the #building#; and

(4) not exceed 25 square feet in aggregate #surface area#.

(c) On any #zoning lot# occupied by a landmark designated by the Landmarks Preservation Commission which lies partially or wholly within the Fifth Avenue Subdistrict, the Chairperson of the City Planning Commission may, by certification, modify the applicable #sign# regulations of Section 32-60 to permit #illuminated signs# on the open area of the #zoning lot#, provided that such #signs# shall:

(1) be a re-creation of historic #signs# and that the Landmarks Preservation Commission has issued a Certificate of Appropriateness or other permit for such #signs#;

(2) not exceed a #surface area# of 12 square feet per #sign#; and

(3) not project across a #street line#.

81-142 - Special frontage regulations

LAST AMENDED
2/2/2011

(a) Transparency requirement

On #wide street# frontages in underlying C5 Districts, at least 50 percent of a #building's# #street wall# surface shall be glazed and transparent at the ground floor level, and not more than 50 percent of such transparent surface shall be painted. For the purpose of the glazing requirements, the #building's# #street wall# surface at the ground floor level shall be measured from the floor to the height of the ceiling or 14 feet above grade, whichever is less.

(b) Banners or pennants

The display of banners or pennants from the exterior of any #building# in an underlying C5 District is prohibited.

81-20 - BULK REGULATIONS

LAST AMENDED
8/9/2017

81-21 - Floor Area Ratio Regulations

LAST AMENDED
8/9/2017

The #floor area ratio# regulations of the underlying districts are modified in accordance with the provisions of Section 81-21, inclusive, or Section 81-241 (Maximum floor area ratios for a residential building or the residential portion of a mixed building). However, the provisions of Section 81-21, inclusive, shall not apply to #non-residential buildings# or #mixed buildings# in the East Midtown Subdistrict, where the special #floor area# provisions of Sections 81-63 or 81-64 shall apply.

81-211 - Maximum floor area ratio for non-residential or mixed buildings

LAST AMENDED
10/7/2021

(a) For #non-residential buildings# or #mixed buildings#, the basic maximum #floor area ratios# of the underlying districts shall apply as set forth in this Section.

(b) In the #Special Midtown District#, the basic maximum #floor area ratio# on any #zoning lot# may be increased by bonuses or other #floor area# allowances only in accordance with the provisions of this Chapter, and the maximum #floor area ratio# with such

additional #floor area# allowances shall in no event exceed the amount set forth for each underlying district in the following table:

MAXIMUM FLOOR AREA ALLOWANCES FOR SPECIFIED FEATURES AND MAXIMUM FLOOR AREA RATIOS BY DISTRICTS

	Maximum #Floor Area Ratio# (FAR)				
Means for Achieving Permitted FAR Levels on a #Zoning Lot#	C5P	C6-4 C6-5 M1-6	C5-2.5 C6-4.5 C6-5.5 C6-6.5	C6-7T	C5-3 C6-6 C6-7
A. Basic Maximum FAR	8.0	10.0	12.0	14.0	15.0
B. Maximum As-of-Right #Floor Area# Allowances: (District-wide Incentives), #Public plazas# - Section 81-23	—	1.0[1,2]	1.0[1,3]	—	1.0[2]
C. Maximum Total FAR with As-of-Right Incentives	8.0	11.0[1,2,7]	13.0[1,3]	14.0	16.0
D. Maximum #Floor Area# Allowances:(District-wide Incentives), #Mass Transit Station# - Section 66-51	1.6	2.0[6]	2.4	2.8	3.0
E. Maximum Total FAR with District-wide and As-of-Right Incentives	9.6	12.0	14.4	16.8	18.0
F. Maximum #Floor Area# Allowances in Penn Center Subdistrict: #Mass Transit Station# Improvement - Section 81-541	—	2.0	—	—	3.0
G. Maximum Total FAR with As-of-Right, District-wide and Penn Center Subdistrict Incentives	—	12.0	—	—	18.0
H. Maximum As-of-Right #Floor Area# Allowances in Theater Subdistrict:					

Development rights (FAR) of a "granting site" - Section 81-744	—	10.0	12.0	14.0	15.0
Maximum amount of transferable development rights (FAR) from "granting sites" that may be utilized on a "receiving site" - Section 81-744(a)	—	2.0	2.4	2.8	3.0
Inclusionary Housing - Sections 23-90 and 81-22	—	2.0[4]	—	—	—
I. Maximum Total FAR with As-of-Right #Floor Area# Allowances in Theater Subdistrict	—	12.0	14.4	16.8	18.0
J. Maximum #Floor Area# Allowances by Authorization in Eighth Avenue Corridor - Section 81-744(b)	—	2.4	—	—	—
K. Maximum Total FAR with As-of-Right and Theater Subdistrict Authorizations	—	14.4	14.4	16.8	18.0
L. Maximum Special Permit #Floor Area# Allowances in Theater Subdistrict: Rehabilitation of "listed theaters" Section 81-745	—	4.4	2.4	2.8	3.0
M. Maximum Total FAR with Theater Subdistrict, District-wide and As-of-Right Incentives	9.6	14.4[8]	14.4	16.8	18.0
N. Maximum FAR of Lots Involving Landmarks:					
Maximum FAR of a lot containing non-bonusable landmark - Section 74-711 or as-of-right	8.0	10.0	12.0	14.0	15.0

Development rights (FAR) of a landmark lot for transfer purposes - Section 74-79	8.0	10.0	13.0[5]	14.0	16.0
Maximum amount of transferable development rights (FAR) from a landmark #zoning lot# that may be utilized on an "adjacent lot" - Section 74-79	1.6	2.0	2.4	No Limit	No Limit
O. Maximum Total FAR of a Lot with Transferred Development Rights from Landmark #Zoning Lot#, Theater Subdistrict Incentives, District-wide Incentives and As-of Right Incentives	9.6	14.4[8]	14.4	No Limit	No Limit

1 Not available for #zoning lots# located wholly within Theater Subdistrict Core

2 Not available within the Eighth Avenue Corridor

3 Not available within 100 feet of a #wide street# in C5-2.5 Districts

4 Applicable only within that portion of the Theater Subdistrict also located within the #Special Clinton District#

5 12.0 in portion of C6-5.5 District within the Theater Subdistrict Core

6 Within R10 Districts outside of #Inclusionary Housing designated areas# the permitted #floor area# bonus shall be calculated in accordance with Section 66-51 (Additional Floor Area for Mass Transit Station Improvements)

7 12.0 for #zoning lots# with full #block# frontage on Seventh Avenue and frontage on West 34th Street, pursuant to Section 81-542 (Retention of floor area bonus for plazas or other public spaces)

8 For #zoning lots# utilizing a #floor area# bonus pursuant to Section 66-51, such maximum #floor area ratio# shall only be permitted through combination with Inclusionary Housing

81-212 - Special provisions for transfer of development rights from landmark sites

LAST AMENDED
8/9/2017

The provisions of Section 74-79 (Transfer of Development Rights From Landmark Sites) shall apply in the #Special Midtown District#, subject to the modification set forth in this Section and Sections 81-254, 81-266 and 81-277 pertaining to special permits for height and setback modifications, Sections 81-63 (Special Floor Area Provisions for the Vanderbilt Corridor Subarea), 81-653 (Special permit for transfer of development rights from landmarks to non-qualifying sites), 81-747 (Transfer of development rights from landmark theaters) and 81-85 (Transfer of Development Rights From Landmark Sites).

The provisions of Section 74-79 pertaining to the meaning of the term "adjacent lot" in the case of lots located in C5-3, C5-5, C6-6, C6-7

or C6-9 Districts are modified to apply in the #Special Midtown District# where the "adjacent lot" is in a C5-3, C6-6, C6-7, C6-5.5, C6-6.5 or C6-7T District.

The provisions of paragraph (c) of Section 74-792 as applied in the #Special Midtown District# shall be subject to the restrictions set forth in the table in Section 81-211 on the development rights (FAR) of a landmark "granting lot" for transfer purposes.

Wherever there is an inconsistency between any provision in Section 74-79 and the table in Section 81-211, the table in Section 81-211 shall apply.

For #developments# or #enlargements# in C5-3, C6-6, C6-7 and C6-7T Districts, the City Planning Commission may also modify or waive the requirements of Section 23-86 (Minimum Distance Between Legally Required Windows and Walls or Lot Lines) and requirements governing the minimum dimensions of a #court#, where:

(a) the required minimum distance as set forth in Section 23-86 is provided between the #legally required windows# in the #development# or #enlargement# and a wall or #lot line# on an adjacent #zoning lot# occupied by the landmark; and

(b) such required minimum distance is provided by a light and air easement on the #zoning lot# occupied by the landmark #building or other structure#, and such easement is acceptable to the Department of City Planning and recorded in the County Clerk's office of the county in which such tracts of land are located.

For #developments# or #enlargements#, on #zoning lots# located in C5-3, C6-6, C6-7 and C6-7T Districts and with frontage on #streets# on which curb cuts are restricted, pursuant to Section 81-44, the Commission may also modify or waive the number of loading berths required pursuant to Section 36-62. In granting such special permit, the Commission shall find that:

(1) a loading berth permitted by Commission authorization, pursuant to Section 81-44, would have an adverse impact on the landmark #building or other structure# that is the subject of the special permit;

(2) because of existing #buildings# on the #zoning lot#, there is no other feasible location for the required loading berths; and

(3) the modification or waiver will not create or contribute to serious traffic congestion or unduly inhibit vehicular and pedestrian movement. For #developments# or #enlargements#, on #zoning lots# located in C5-3, C6-6, C6-7 and C6-7T Districts, the Commission may also modify the dimensions and minimum clear height required for pedestrian circulation space, pursuant to Sections 37-50 and 81-45. In granting such special permit, the Commission shall find that the modification will result in a distribution of #bulk# and arrangement of #uses# on the #zoning lot# that relate more harmoniously with the landmark #building or other structure# that is the subject of the special permit.

81-213 - Special provisions for transfer of development rights from listed theaters within the Special Clinton District

LAST AMENDED
9/13/2006

In C6-2 Districts within the #Special Clinton District#, for #zoning lots#, or portions thereof, comprised of listed theaters designated in Section 81-742, the City Planning Commission shall allow a transfer of development rights pursuant to Section 81-744 (Transfer of development rights from listed theaters). The basic maximum #floor area ratio# for transfer purposes for such #zoning lots#, or portions thereof, shall be 6.02.

81-22 - As-of-right Floor Area Bonuses

LAST AMENDED
10/17/2007

As-of-right #floor area# bonuses are not permitted in the #Special Midtown District#, except in accordance with the provisions of the following Section:

Section 81-23 (Floor Area Bonus for Public Plazas).

In addition, the provisions of Section 23-90 (INCLUSIONARY HOUSING) shall be applicable in that portion of the #Special Midtown District# which is also within the #Special Clinton District#, pursuant to Section 81-023 (Applicability of the Special Clinton District regulations).

Any #floor area# bonus granted by certification for through #block# gallerias prior to August 6, 1998, shall remain in effect provided, however, that such certification shall automatically lapse if substantial construction, in accordance with the plans for which such certification was granted, has not been completed within four years from the effective date of such certification.

81-23 - Floor Area Bonus for Public Plazas

LAST AMENDED
8/9/2017

Within the #Special Midtown District#, for each square foot of #public plaza# provided on a #zoning lot#, the basic maximum #floor area# permitted on that #zoning lot# under the provisions of Section 81-211 (Maximum floor area ratio for non-residential or mixed buildings) may be increased by six square feet, provided that in no case shall such bonus #floor area# exceed a #floor area ratio# of 1.0.

This Section shall be applicable in all underlying districts throughout the #Special Midtown District#, except that there shall be no #floor area# bonus for a #public plaza# that is:

(a) on #zoning lots# in the C5P District within the Preservation Subdistrict;

(b) within 50 feet of a #street line# of a designated #street# on which retail or #street wall# continuity is required, pursuant to Sections 81-42 (Retail Continuity Along Designated Streets) or 81-43 (Street Wall Continuity Along Designated Streets);

(c) on a #zoning lot#, any portion of which is within the Theater Subdistrict Core, as defined in Section 81-71 (General Provisions); and

(d) on #zoning lots#, any portion of which is in the Grand Central Core Area, as shown on Map 2 (East Midtown Subdistrict and Subareas) in Appendix A of this Chapter, or on #qualifying sites#, as defined in Section 81-613, in any other subarea of the East Midtown Subdistrict.

All #public plazas# provided within the #Special Midtown District# shall comply with the requirements for #public plazas# set forth in Section 37-70, inclusive.

A major portion of a #public plaza# may overlap with a sidewalk widening which may be provided to fulfill the minimum pedestrian circulation space requirements set forth in Section 81-45 (Pedestrian Circulation Space), provided that the overlapping portion of the #public plaza# also conforms to the design standards of Section 37-50 (REQUIREMENTS FOR PEDESTRIAN CIRCULATION SPACE) for a sidewalk widening. Such sidewalk widening may be included in the major portion of a #public plaza# for purposes of calculating the proportional restrictions set forth in Section 37-715.

81-231 - Existing plazas or other public amenities

LAST AMENDED
10/17/2007

(a) Elimination or reduction in size of existing #publicly accessible open area# or other public amenities

No existing #publicly accessible open area# or other public amenity, open or enclosed, for which a #floor area# bonus has been utilized, shall be eliminated or reduced in size, except by special permit of the City Planning Commission, pursuant to Section 74-761 (Elimination or reduction in size of bonused public amenities).

(b) Kiosks and open air cafes

Kiosks and open air cafes may be placed within an existing #publicly accessible open area# for which a #floor area# bonus has been received by certification, pursuant to Section 37-73 (Kiosks and Open Air Cafes).

(c) Nighttime closing of existing #publicly accessible open areas#

The Commission may, upon application, authorize the closing of an existing #publicly accessible open area# for which a #floor area# bonus has been received, during certain nighttime hours, pursuant to Section 37-727 (Hours of access).

(d) Special provisions for certain #covered pedestrian spaces#

Where a portion of an existing #covered pedestrian space# was designated by a special authorization of the Commission prior to May 13, 1982, to be used for off-street loading after business hours, the Commission may, by special permit, after public notice and hearing, and subject to City Council action, allow relocation of the loading facilities and modifications relating to the loading berth requirements, provided that such modifications will result in substantial improvement of the pedestrian circulation system and amenities within the existing #covered pedestrian space# without adversely affecting the operation of off-street loading facilities.

(e) Elimination or reduction in size of non-bonused open area on a #zoning lot# containing a bonused amenity

Any existing open area for which a #floor area# bonus has not been utilized that occupies the same #zoning lot# as an existing #publicly accessible open area# or other public amenity, open or enclosed, for which a #floor area# bonus has been utilized, may be reduced in size or eliminated only upon certification of the Chairperson of the City Planning Commission that all bonused amenities comply with the standards under which such #floor area# bonus was granted.

81-232 - Special provisions for zoning lots divided by district boundaries

LAST AMENDED
10/17/2007

Where a #public plaza# is located on a #zoning lot# divided by a district boundary, the #floor area# bonus for such #public plaza# may be credited to either portion of the #zoning lot# regardless of the #public plaza's# location or the date when the #zoning lot# was created, provided that the amount of such bonus permitted on either portion of the #zoning lot# shall not exceed the maximum amount that would be permitted on such portion if it were a separate #zoning lot# and subject to all other applicable provisions of Article VII, Chapter 7.

81-24 - Floor Area, Lot Coverage and Building Spacing Regulations for Residential Uses

LAST AMENDED
7/26/2001

81-241 - Maximum floor area ratios for a residential building or the residential portion of a mixed building

LAST AMENDED
2/2/2011

For #residential buildings# or #residential# portions of #mixed buildings# in the #Special Midtown District#, the maximum #floor area ratio# for each underlying district is as follows:

(a) In the C5-P District the maximum #floor area ratio# is 8.0, and no additional #floor area# shall be allowed above this limit.

(b) In all underlying districts other than the C5-P District, except as provided in paragraph (c) of this Section, the maximum #residential# #floor area ratio# is 10.0.

(c) In any underlying district other than a C5-P, C6-4 or C6-5 District, or in a C6-4 or C6-5 District within the Theater Subdistrict where a #zoning lot# has been granted bonus #floor area# or other #floor area# allowances in accordance with the provisions of Section 81-741 (General provisions), such #zoning lot# shall qualify for a maximum #residential# #floor area ratio# of 12.0 if the

#development# or the #building# containing the #enlargement# includes recreational space for the #residential# occupants in an amount not less than 13 square feet for each #rooming unit#, 16.25 square feet for each #dwelling unit#, or a total area of at least 5,000 square feet, whichever is greater. The recreational space may be located at any level including a roof. Such recreational space shall:

(1) be restricted to #residential# occupants of the #development# or the #building# containing the #enlargement# and their guests, for whom no admission or membership fees may be charged;

(2) be directly accessible from a lobby or other public area served by the #residential# elevators;

(3) be landscaped, including trees or shrubbery, except where covered or developed with recreational facilities and seating areas;

(4) contain not less than 500 square feet of continuous area on a single level with no dimension of less than 15 feet;

(5) have not less than 50 percent of the area open from its lowest level to the sky. The remaining portion may be roofed and up to 50 percent of its perimeter may be enclosed. In no event may more than 25 percent of the required recreational space be fully enclosed. All enclosures shall be transparent except when located within the #building#. Covered areas shall contain recreational facilities or seating areas.

A copy of requirements (c)(1) through (c)(5), as set forth in this Section, shall be permanently posted in a conspicuous place within each recreational space.

81-242 - Regulations on minimum spacing between buildings

LAST AMENDED
2/2/2011

When a #building# containing #residential# #uses# is located on the same #zoning lot# as another #building#, the provisions of Section 23-70 (MINIMUM REQUIRED DISTANCE BETWEEN TWO OR MORE BUILDINGS ON A SINGLE ZONING LOT) shall not apply.

81-25 - General Provisions Relating to Height and Setback of Buildings

LAST AMENDED
8/9/2017

For all #buildings# in the #Special Midtown District#, except as provided in Section 81-90 (SPECIAL REGULATIONS FOR PRESERVATION SUBDISTRICT), the height and setback regulations of the underlying districts are superseded by the provisions of this Section and by the two alternate sets of regulations controlling the height and setback of #buildings# as set forth in Sections 81-26 (Height and Setback Regulations--Daylight Compensation) and 81-27 (Alternate Height and Setback Regulations--Daylight Evaluation), respectively. For the purposes of applying height and setback regulations, the term "#buildings#" shall include #buildings or other structures#, except if specifically stated otherwise.

For the purposes of Sections 81-25 through 81-27, inclusive, all #buildings# on a #zoning lot# shall be considered a single #building#. Existing portions of such #buildings# are referred to as an "existing #building#." A "new #building#" shall include #developments#, #enlargements# or alterations that increase the width or height of a #building# wall.

An applicant for plan approval by the Department of Buildings may elect to be governed by the provisions of either Section 81-26 or 81-27 in addition to the provisions of this Section.

This Section sets forth the provisions that are common to both sets of regulations.

81-251 - Purpose of height and setback regulations

LAST AMENDED
2/2/2011

The common purpose of these two sets of regulations is to offer maximum design flexibility while setting reasonable but firm standards to protect access of light and air to public #streets# and adjacent #buildings#.

This purpose is implemented by the two alternate sets of regulations, which are based on two distinct approaches. Both sets are concerned with daylight at #street# level.

The daylight compensation regulations require any #building# generally to be built within a sky exposure curve which relates required setbacks to #building# heights. Within limits, the #buildings# may encroach outside the curve but only if extra setbacks or recesses provided elsewhere on the same #street# frontage of the #zoning lot# compensate for the #encroachment#. In the regulations, the sky exposure curve for three #street# width categories is represented in each case by a table of required setbacks related to #building# heights.

The daylight evaluation regulations measure and evaluate portions of sky blocked by a #building# as viewed from specified #vantage points# in the #street#. The #building# is plotted on #daylight evaluation charts# representing the #zoning lot's# available daylight from specified #vantage points#, measured in daylight squares as defined in paragraph (b) of Section 81-272. Daylight blockage by the #building# is then measured to determine the #building's# score on each frontage and the average score for the #building# as a whole. The regulations specify the minimum passing scores for compliance.

81-252 - Permitted obstructions

LAST AMENDED
4/30/2012

Except as set forth in this Section, structures which under the provisions of Sections 33-42 or 43-42 (Permitted Obstructions) or 34-11 or 35-10 (GENERAL PROVISIONS), are permitted to penetrate a maximum height limit or a #sky exposure plane# shall not be permitted as exceptions to the height limitations, setback requirements or rules for the measurement of #encroachments# or #compensating recesses# set forth in Section 81-26 (Height and Setback Regulations—Daylight Compensation), nor shall they be excluded in determining daylight blockage pursuant to the provisions of Section 81-27 (Alternate Height and Setback Regulations—Daylight Evaluation).

The following shall be permitted as exceptions to the height regulations, setback requirements or rules for the measurement of #encroachments# or #compensating recesses#, set forth in Section 81-26, and shall be excluded in determining daylight blockage, pursuant to the provisions of Section 81-27:

(a) unenclosed balconies conforming to the provisions of Section 23-13 (Balconies); and

(b) exterior wall thickness, up to eight inches, where such wall thickness is added to the exterior face of a #building# wall existing on April 30, 2012, provided the added wall thickness has a thermal resistance (R-value) of at least 1.5 per inch. Where #buildings# that have added exterior wall thickness pursuant to this Section are #enlarged#, such #enlarged# portion may similarly penetrate a maximum height limit in order to align with the exterior walls of the existing #building#, provided such #enlargement# contains less #floor area# than the existing #building#, and there is no penetration of #floor area# above a maximum height limit.

81-253 - Special provisions for the East Midtown, Theater, Fifth Avenue, Penn Center and Preservation Subdistricts

LAST AMENDED
8/9/2017

The provisions of Sections 81-26 (Height and Setback Regulations-- Daylight Compensation) and 81-27 (Alternate Height and Setback Regulations--Daylight Evaluation) are supplemented and modified by special provisions applying in the Fifth Avenue Subdistrict, as set forth in Sections 81-81 (General Provisions) and 81-83 (Special Street Wall Requirements) or in the Theater Subdistrict as set forth in Sections 81-71 (General Provisions) and 81-75 (Special Street Wall and Setback Requirements) or in the East Midtown Subdistrict as set forth in Sections 81-61 (General Provisions), 81-66 (Special Height and Setback Requirements), inclusive, or 81-671 (Special street wall requirements), or in the Penn Center Subdistrict as set forth in Section 81-532 (Special street wall requirements).

The provisions of Sections 81-26 and 81-27 are not applicable in the Preservation Subdistrict, where height and setback is regulated by the provisions of Section 81-90 (SPECIAL REGULATIONS FOR PRESERVATION SUBDISTRICT).

81-254 - Special permit for height and setback modifications

LAST AMENDED
8/9/2017

In the #Special Midtown District#, the City Planning Commission may modify the special height and setback regulations set forth in this Chapter only in accordance with the following provisions:

Section 74-711 (Landmark preservation in all districts) as modified by the provisions of Sections 81-266 or 81-277 (Special permit for height and setback modifications)

Section 74-79 (Transfer of Development Rights From Landmark Sites) where development rights are transferred from a landmark site to an adjacent lot in a C5-3, C6-6 or C6-7 District, as modified by Section 81-212, and the total #floor area# on the adjacent lot resulting from such transfer exceeds the basic maximum #floor area ratio# by more than 20 percent. In such cases, the granting of a special permit by the Commission for height and setback modifications shall be in accordance with the provisions of Sections 81-266 or 81-277

Section 81-066 (Special permit modifications of Section 81-254, Section 81-40 and certain Sections of Article VII, Chapter 7)

Section 81-632 (Special permit for transfer of development rights from landmarks to the Vanderbilt Corridor Subarea)

Section 81-633 (Special permit for Grand Central public realm improvements)

Section 81-685 (Special permit to modify qualifying site provisions)

81-26 - Height and Setback Regulations--Daylight Compensation

LAST AMENDED
5/13/1982

81-261 - Definitions

LAST AMENDED
2/2/2011

Compensating recess

A portion of a #zoning lot# which, at the #building# height selected for determining compliance with the provisions of Section 81-26 (Height and Setback Regulations--Daylight Compensation), lies in the #free zone# (Zone A on the #encroachment grid#), is not covered by any portion of a #building# and qualifies as compensating for #encroachments# beyond the #free zone# under the provisions of Section 81-264 (Encroachments and compensating recesses). (See illustration of #Compensating Recess# and #Encroachment#)

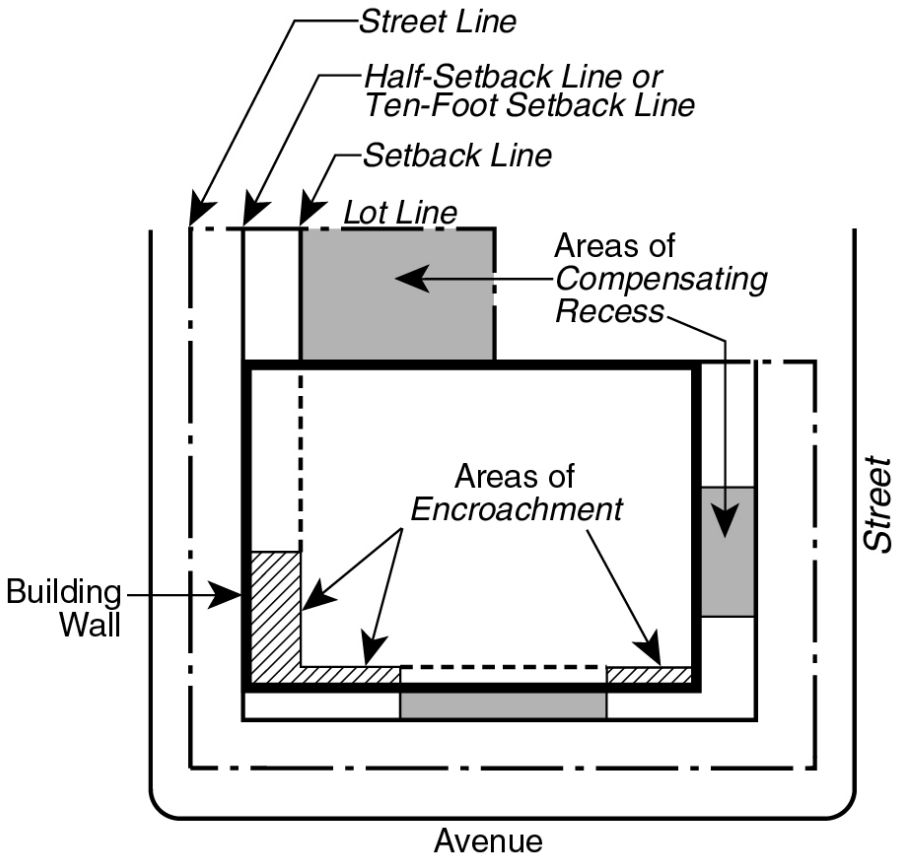

COMPENSATING RECESS AND ENCROACHMENT

(81-261.1)

Encroachment

A projection beyond the #setback line#, the #free zone# or the #half-setback line# by any portion of a #building# that exceeds the maximum height permitted at the #street line#. (See illustration of #Compensating Recess# and #Encroachment#)

Encroachment grid

A plan drawing of the #zoning lot# at any given height above #curb level# selected to determine compliance with the provisions of Section 81-26 and showing, for that height, #street lines#, #setback lines#, #half-setback lines#, #Zone A# (the #free zone#), #Zone B# and #Zone C# (#encroachment zones#) and, where applicable, the #ten-foot setback line#. The #encroachment grid# serves as a device for measuring areas of #encroachment# beyond the #free zone# and areas of #compensating recess# within the #free zone#. (See illustration of #Encroachment Grid#)

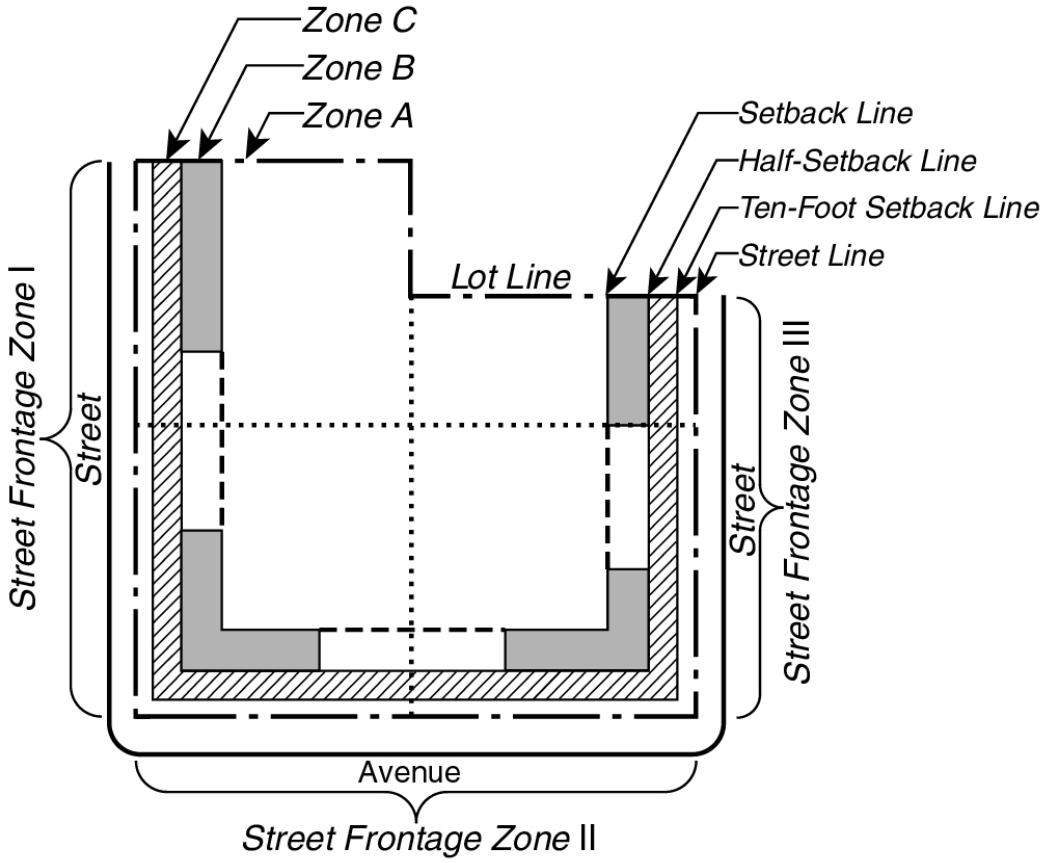

ENCROACHMENT GRID

(81-261.2)

Free zone

That portion of a #zoning lot#, at any given height, which may be covered by a #building# without coverage constituting an #encroachment# that requires daylight compensation.

In addition to the area that lies behind a #setback line# or #setback lines#, the #free zone# shall include areas between the #setback line# and either the #half-setback line# or the #ten-foot setback line#, whichever is further from the #street line#, and which qualify as #free zone# areas under the #middle one-third rule#. The #free zone# is referred to as #Zone A# on the #encroachment grid#.

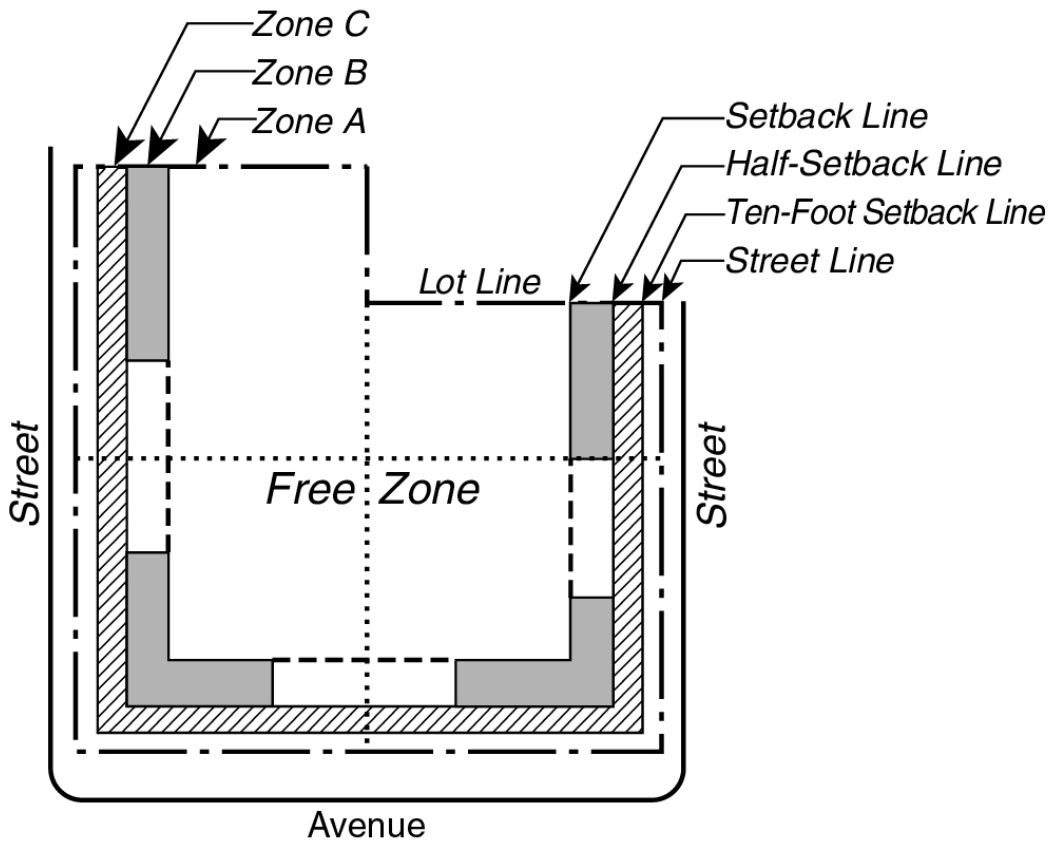

FREE ZONE

(81-261.3)

Half-setback line

A line drawn parallel to a #street line# and halfway between the #street line# and the #setback line#. (See illustration of #Setback Line# and #Half-Setback Line#)

Middle one-third rule

The rule under which, for the middle one-third of the #front lot line# length, the #free zone# includes area between the #setback line# and either the #half-setback line# or the #ten-foot setback line#, whichever is further from the #street line#. However, on a #corner lot# the #free zone# does not extend beyond the #setback line# along an intersecting #street#. (See illustrations of #Middle One-Third Rule#)

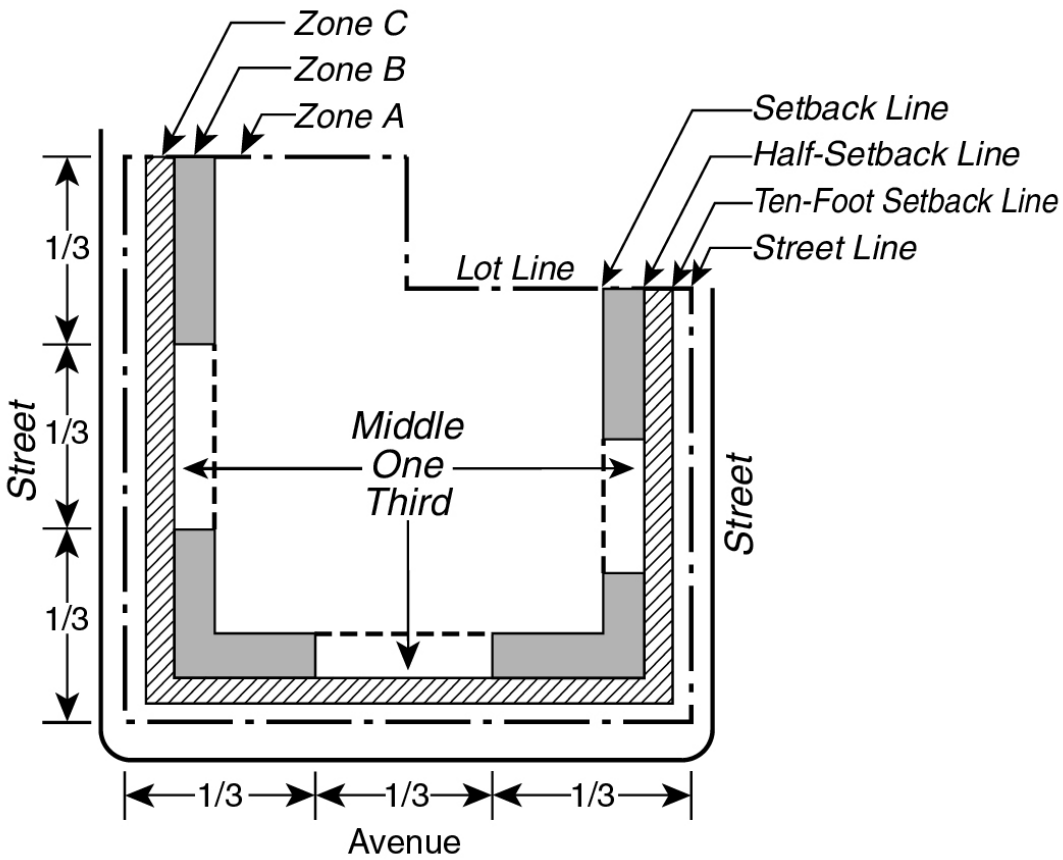

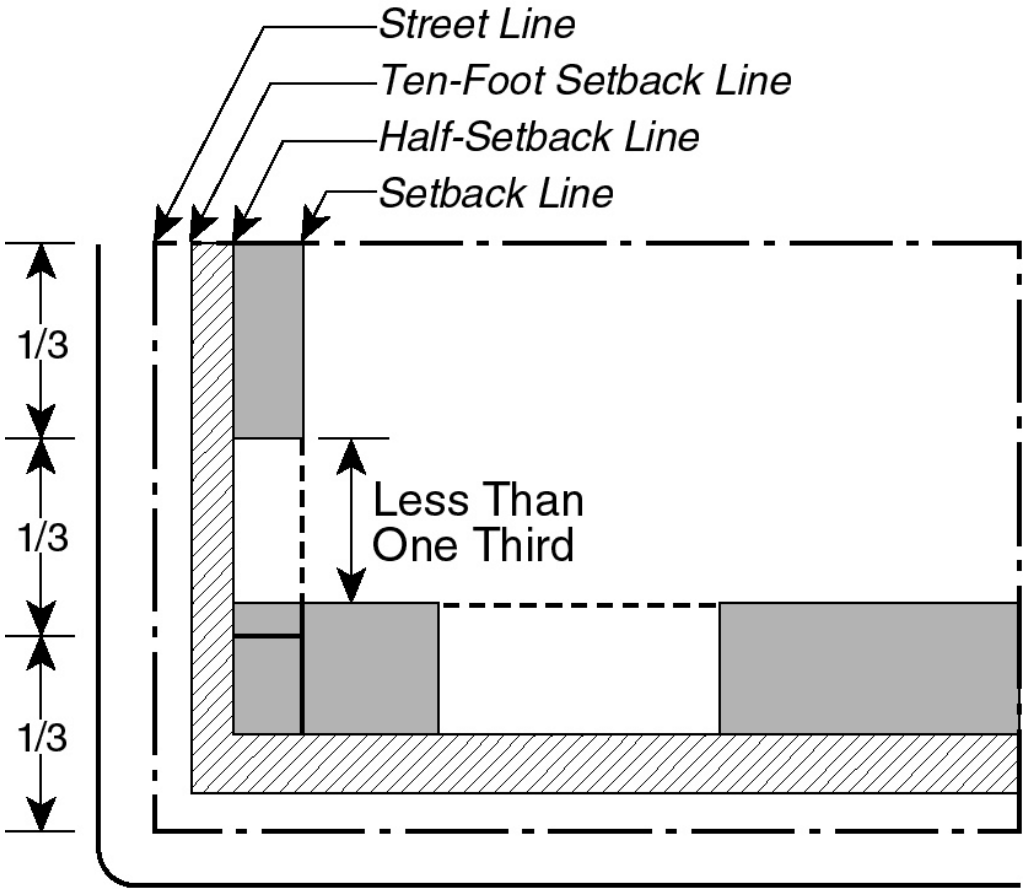

MIDDLE ONE-THIRD RULE

(81-261.4)

Setback line

A line drawn in plan parallel to a #street line# and showing for a given #building# height the minimum depth to which a #building# is required to be set back from the #street line# by the applicable depth to height chart in Section 81-263 (Standard setback requirements). Required setbacks, established by the chart, increase with the #building's# height. (See illustration of #Setback Line# and #Half-Setback Line#)

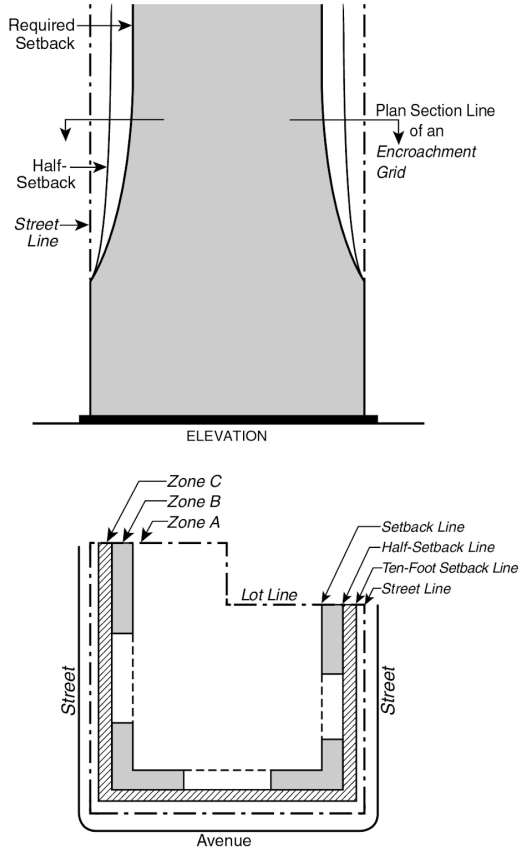

SETBACK LINE AND HALF-SETBACK LINE

(81-261.5)

Street frontage zone

A portion of a #zoning lot# which lies within an area bounded by a continuous #front lot line# and either the center line of the #block# or a line 100 feet distant from and parallel to that #front lot line#, whichever is closer to that #front lot line#. There shall be a #street frontage zone# for each #zoning lot# #street# frontage. (See illustration of #Street Frontage Zones#)

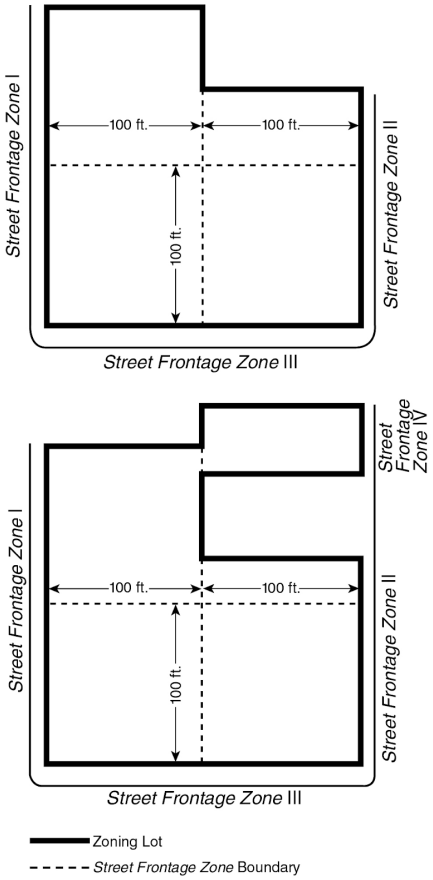

STREET FRONTAGE ZONES

(81-261.6)

Ten-foot setback line

A line which is parallel to the #street line# at a depth of 10 feet and represents the minimum distance any portion of a #building# exceeding the maximum height at the #street line# is required to be set back from the #street line#. A greater setback distance may be required by a #setback line# or a #half-setback line# depending upon the #building# height for which such #setback line# or #half-setback line# is established.

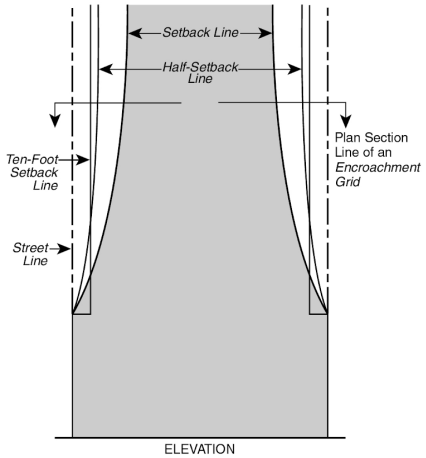

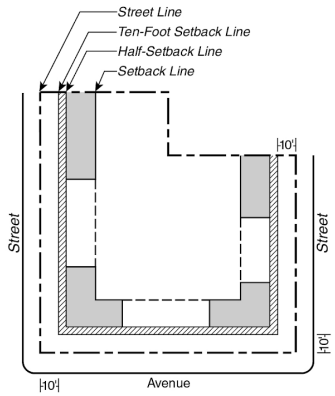

TEN-FOOT SETBACK LINE ON AN ENCROACHMENT GRID

(81-261.7)

Zone A, Zone B, Zone C

"Zone A," "Zone B" and "Zone C" are zones on an #encroachment grid# defined as follows:

(a) #Zone A# is the #free zone#.

(b) #Zone B#, an #encroachment# zone, is the zone, exclusive of any area in #Zone A# and any area closer to the #street line# than the #ten-foot setback line#, which lies between the #setback line# and either the #half-setback line# or the #ten-foot setback line#, whichever is further from the #street line#.

(c) #Zone C#, an #encroachment# zone and penalty zone, is the zone, exclusive of any area closer to the #street line# than the #ten-foot setback line#, which lies between the #half-setback line# and the #ten-foot setback line#.

81-262 - Maximum height of front wall at the street line

LAST AMENDED
5/13/1982

(a) General provisions

The front wall of a #building# at the #street line# shall not exceed the height limit applying along the #street# on which it fronts. Maximum front wall heights at the #street line# vary with the width of the #street# on which the wall fronts, as follows:

#Street# Width (in feet)	Maximum Front Wall Height at #Street Line# (in feet)
60 or less	90
75 or 80	120
100 or more	150

(b) Special provisions for #corner lots#

For a #corner lot# with frontage on #streets# of different widths, the maximum front wall height at the #street line# of the narrower #street# may be increased above that indicated in paragraph (a) in accordance with either one of the following rules:

Rule 1:

The maximum front wall height at the #street line# for the wider #street# may extend up to 100 feet from the corner along the #street line# of the narrower #street#; or

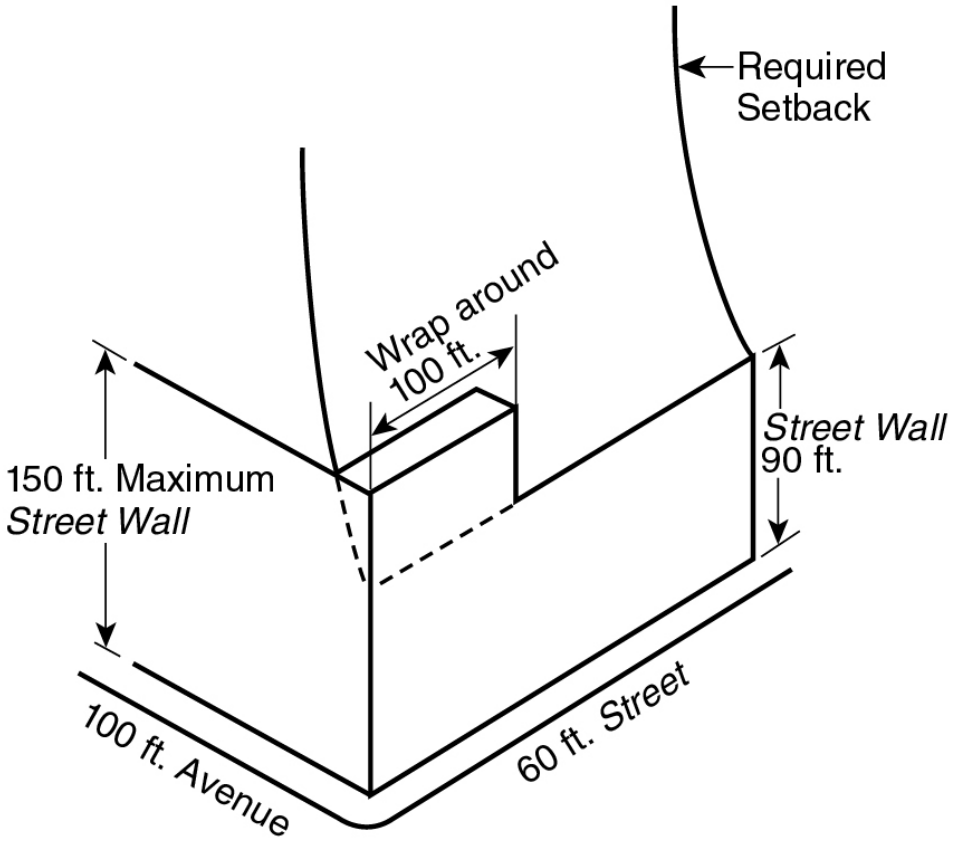

SPECIAL RULE 1 FOR CORNER LOTS

(81-262b.1)

Rule 2:

For any length of frontage from the corner along the narrower #street#, a maximum height for such length of frontage may apply, which shall be the weighted average of (1) the height permitted under Rule 1 for the first 100 feet from the corner, and (2) the standard height limit for front walls on the narrower #street# for the remainder of the frontage. (See illustration of Special Rules for #Corner Lots#)

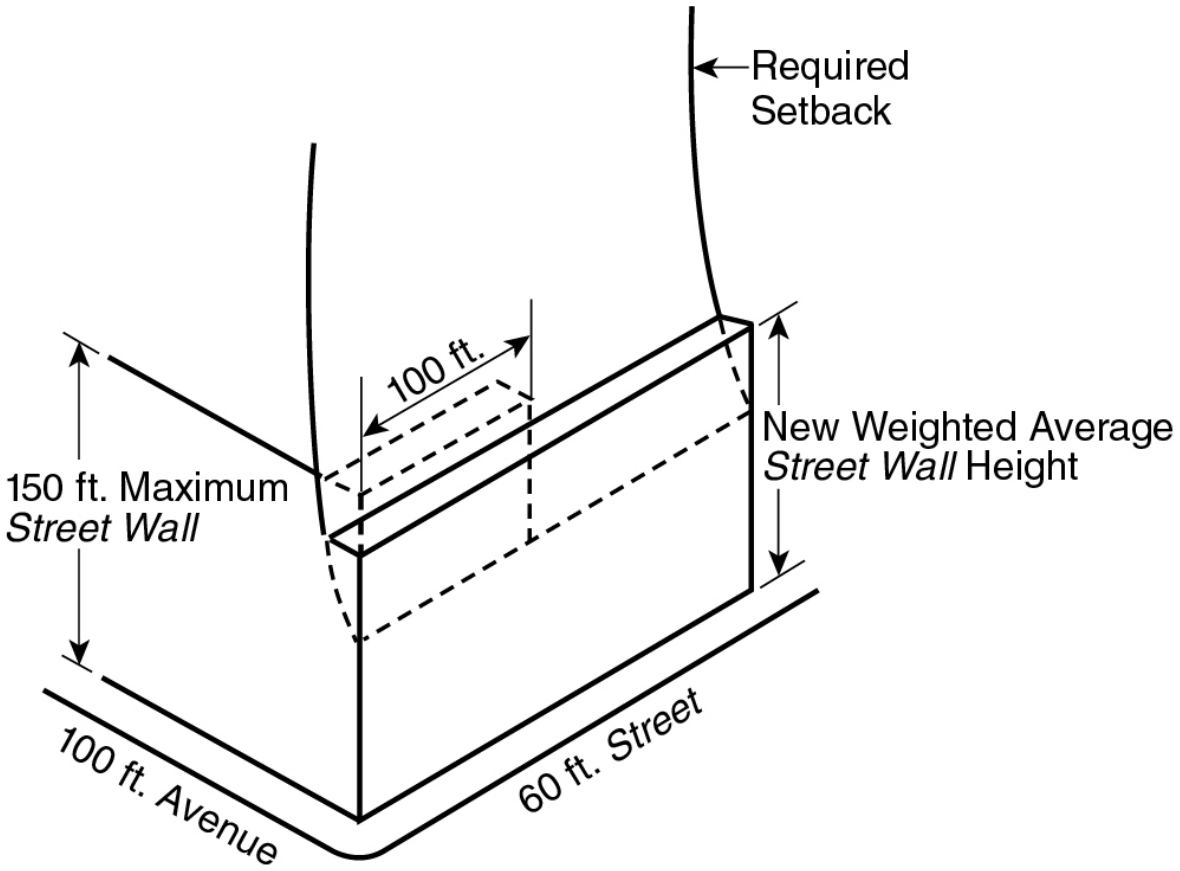

SPECIAL RULE 2 FOR CORNER LOTS

(81-262b.2)

81-263 - Standard setback requirements

LAST AMENDED
2/2/2011

#Buildings# shall comply with the regulations of this Section.

(a) Ten-foot setback requirement

Above the maximum height permitted at the #street line# pursuant to the provisions of Section 81-262, every portion of a #building# shall be set back at least 10 feet from the #street line#.

(b) General setback provisions; depth to height charts

Above the maximum height permitted at the #street line#, #buildings#, in addition to meeting the requirements of paragraph (a) of this Section, are required to be set back behind the applicable #setback line#, the depth of the #setback line# at any point depending upon the height of the wall at that point in accordance with the requirements of applicable Tables A, B or C of this Section presenting required setbacks from #streets# 60 feet or less, 75 or 80 feet, or 100 or more feet in width, respectively.

Table A

SETBACK REQUIREMENTS

ON #STREETS# 60 FEET OR LESS IN WIDTH

Depth of #Setback Line# from #Street Line# at

Stated Heights above #Curb Level#.

Height	Depth of #Setback Line#
90	0.00
100	2.00
110	4.00
120	6.00
130	8.00
140	10.00
150	12.00
160	13.75
170	15.25
180	16.75
190	18.50
200	20.00
210	21.25
220	22.50
230	24.00
240	25.25

250	26.50
260	27.50
270	28.75
280	30.00
290	30.75
300	31.75
310	32.75
320	33.75
330	34.75
340	35.50
350	36.25
360	37.25
370	38.00
380	38.75
390	39.50
400	40.25
410	41.00
420	41.75
430	42.25
440	43.00
450	43.50

460	44.25
470	44.75
480	45.50
490	46.00
500	46.50
510	47.00
520	47.50
530	48.00
540	48.50
550	49.00
560	49.50
570	50.00
580	50.50
590	51.00
600	51.50
610	52.00
620	52.25
630	52.75
640	53.00
650	53.50
660	53.75

670	54.25
680	54.50
690	55.00
700	55.25
710	55.75
Above 710	For every 10 feet the depth shall increase by one foot

Table B

SETBACK REQUIREMENTS

ON #STREETS# 75 OR 80 FEET WIDE

Depth of #Setback Line# from #Street Line# at

Stated Heights above #Curb Level#.

Height	Depth of #Setback Line#
120	0.00
130	1.50
140	3.50
150	5.50
160	7.50
170	9.25
180	11.00
190	12.75
200	14.25
210	15.75

220	17.25
230	18.75
240	20.00
250	21.25
260	22.50
270	23.75
280	24.75
290	26.00
300	27.00
310	28.00
320	29.00
330	30.00
340	31.00
350	32.00
360	32.75
370	33.75
380	34.50
390	35.50
400	36.25
410	37.00
420	37.75

430	38.25
440	39.00
450	39.75
460	40.50
470	41.00
480	41.75
490	42.50
500	43.00
510	43.50
520	44.00
530	44.75
540	45.25
550	45.75
560	46.25
570	46.75
580	47.25
590	47.75
600	48.25
610	48.75
620	49.00
630	49.50

640	50.00
650	50.50
660	50.75
670	51.25
680	51.75
690	52.00
700	52.50
710	53.00
Above 710	For every 10 feet the depth shall increase by one foot

Table C

SETBACK REQUIREMENTS

ON #STREETS# AT LEAST 100 FEET WIDE

Depth of #Setback Line# from #Street Line# at

Stated Heights above #Curb Level#.

Height	Depth of #Setback Line#
150	0.00
160	1.50
170	3.00
180	5.00
190	6.75
200	8.50
210	10.25

220	11.75
230	13.25
240	14.75
250	16.00
260	17.25
270	18.75
280	20.00
290	21.00
300	22.25
310	23.50
320	24.50
330	25.50
340	26.50
350	27.50
360	28.50
370	29.50
380	30.25
390	31.25
400	32.00
410	33.00
420	33.75

430	34.50
440	35.25
450	36.00
460	36.75
470	37.25
480	38.00
490	38.75
500	39.25
510	40.00
520	40.50
530	41.25
540	41.75
550	42.25
560	42.75
570	43.50
580	44.00
590	44.50
600	45.00
610	45.50
620	46.00
630	46.50

640	47.00
650	47.50
660	47.75
670	48.25
680	48.75
690	49.25
700	49.50
710	50.00
Above 710	For every 10 feet the depth shall increase by one foot

(c) Use of tables

To comply with the setback requirements of this Section, a #building# at any height shall be set back at least to the depth of the #setback line# indicated on the applicable table.

For heights between those shown on the table, the depth of the #setback line# shall be interpolated.

Required depths of #setback lines# shall be rounded off to the next highest half foot.

The setback requirements apply only to portions of #buildings# above the maximum height permitted at the #street line#, so that required setbacks on the narrower #street# frontage of a #corner lot# shall apply only to heights above the maximum front wall heights permitted by the #corner lot# provisions of paragraph (b) of Section 81-262 (Maximum height of front wall at the street line).

(d) #Middle one-third rule#

A #building# may penetrate beyond the #setback line# at any height if the penetration is confined to the middle third of the #front lot line# length and complies in all respects with the #middle one-third rule# as defined in Section 81-261 (Definitions).

81-264 - Encroachments and compensating recesses

LAST AMENDED
2/2/2011

In addition to complying with the setback requirements of Section 81-263 (Standard setback requirements), a #building# shall not at any height encroach beyond a #half-setback line# or a #ten-foot setback line#, except as provided below. For each #street frontage zone# and for all #street frontage zones#, taken together on a single #encroachment grid#, a #building# shall not, at any level, have an aggregate area of #encroachment# beyond the #setback line#, other than in any #free zones#, greater than the aggregate area of #compensating recess# at such level.

Except as provided below, an area of #compensating recess# in one #street frontage zone# shall not be used to compensate for #encroachment# in another #street frontage zone#. However, a #building# with a #street frontage zone# which lies along a north-south #wide street# and does not meet the above requirements because of excessive #encroachment# will be in compliance with the #street frontage zone# requirements of this Section if compensation is provided for such excessive #encroachment# by an overlapping #street frontage zone#.

The requirement that the aggregate area of #compensating recess# at least equal the aggregate area of #encroachment#, as set forth in this Section, shall also apply to any #building# which encroaches beyond a #half-setback line# and which is therefore subject to the provisions of Section 81-265 (Encroachment limitations by length and height rules). (See illustration of Encroachments and Compensating Recesses)

(a) Rules for measuring #encroachments# and recesses

Areas of #encroachment# and #compensating recess# shall be measured in plan on one or more #encroachment grids# showing for the #zoning lot#, at a given height level, the #street lines#, the #setback lines#, the #half-setback lines#, the #ten-foot setback lines#, #Zone A#, #Zone B# and #Zone C# and the #street frontage zones#.

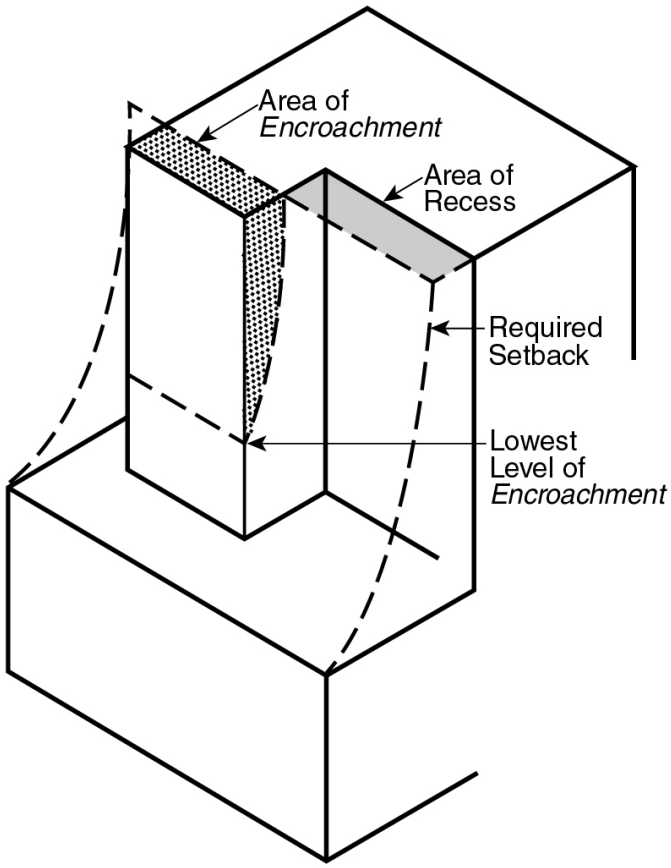

ENCROACHMENTS AND COMPENSATING RECESSES

(81-264a)

The scale of the #encroachment grid# shall be not more than 20 feet to the inch. All #buildings#, existing and proposed, shall be located accurately on the grid in plan at the height level selected to demonstrate compliance. For each #street frontage zone#, the areas of the #building's# #encroachment# in #Zone B# and #Zone C# and the #compensating recess# areas not covered by any #building# in #Zone A# shall be measured on the #encroachment grid#.

(b) Limits of #encroachment#

Except as provided in paragraph (d) of this Section for existing #buildings# below specified heights, #encroachment# is limited as follows:

(1) For each #street frontage zone#, at every height above the maximum front wall height at the #street line#, the area within #Zone A# that is not covered by a #building# and qualifies as #compensating recess# area shall, in the aggregate, equal or exceed the aggregate area in #Zone B# and #Zone C# that is encroached upon by a #building# at such height.

(2) No part of a #building# shall encroach into #Zone C# unless it complies with the provisions of Section 81-265.

(3) On #corner lots#, the projection of a #building# beyond the #setback line# or #half-setback line# on the narrower #street# shall not count as an #encroachment# except at heights above the maximum height permitted at the #street line# by the #corner lot# provisions in paragraph (b) of Section 81-262 (Maximum height of front wall at the street line).

(c) Limitations on #compensating recess#

#Compensating recess# areas are subject to the following limitations:

(1) Any required #compensating recess# area shall extend without diminution of dimensions downward at least to the lowest level at which any #encroachment# into #Zone B# or #Zone C# occurs and upward to the sky. (See illustration of Extension Downward of Compensating Recess Area)

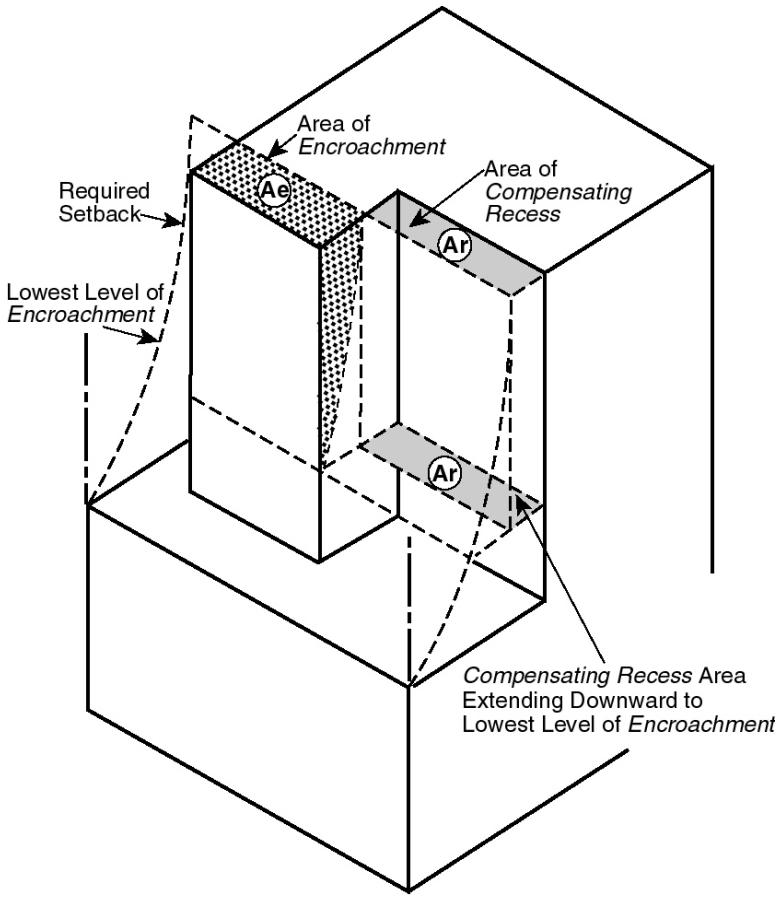

EXTENSION DOWNWARD OF COMPENSATING RECESS AREA

(81-264c1)

(2) #Compensating recess# area shall be visible when viewed from at least one adjacent #street# along a line that intersects the #front lot line# of the #zoning lot# at right angles. (See illustration of Visibility of Compensating Recess Area)

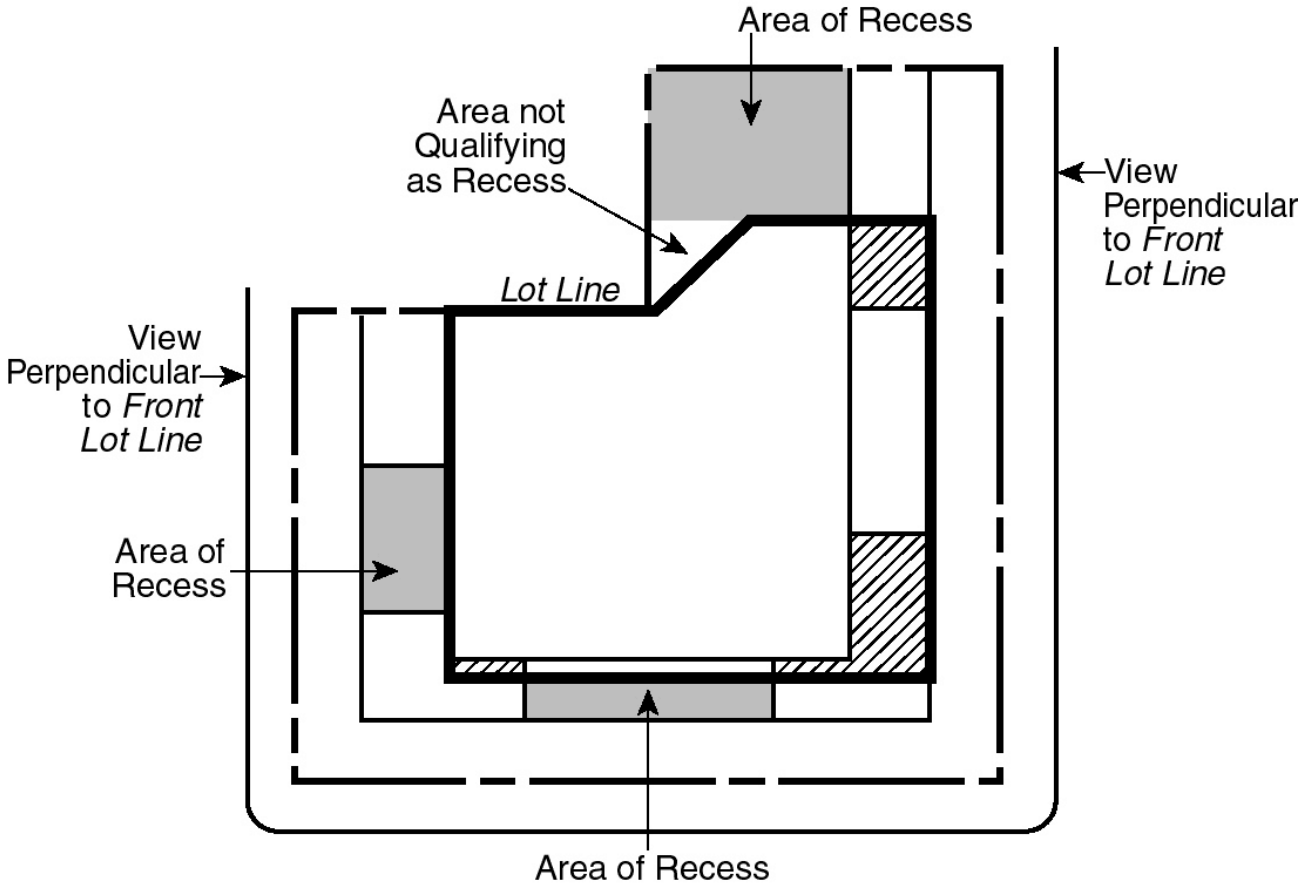

VISIBILITY OF COMPENSATING RECESS AREA

(81-264c2)

(3) The minimum length of a #compensating recess#, measured parallel to the #street line#, and behind the #setback line#, is 30 feet, except for any uncovered portion of an area that qualifies as #Zone A# under the #middle one-third rule# or an uncovered area located behind two intersecting #setback lines#. An uncovered area between the #setback line# and #half-setback line# that qualifies as #Zone A# under the #middle one-third rule# is not subject to the minimum length requirement. (See illustration of Minimum Length of Compensating Recess)

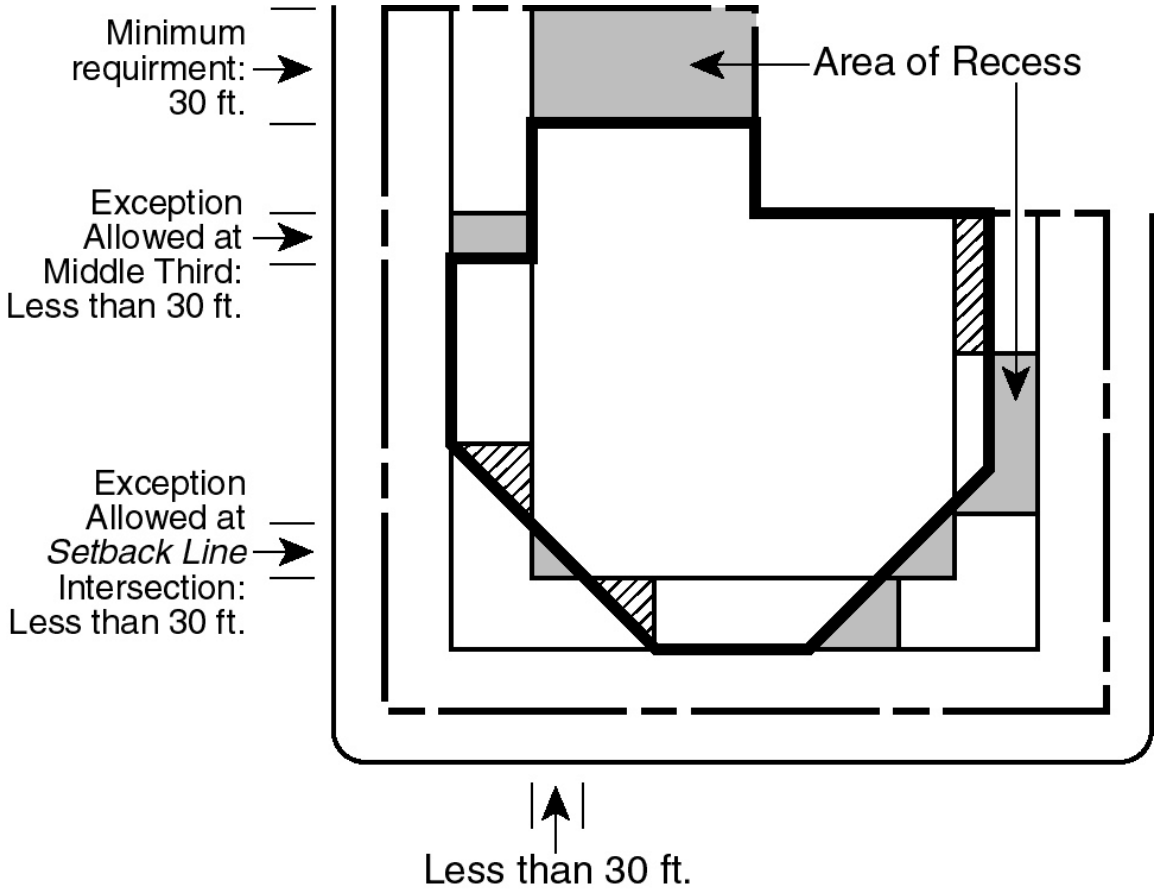

MINIMUM LENGTH OF COMPENSATING RECESS

(81-264c3)

(4) #Compensating recess# area shall be within 100 feet of a #front lot line#.

(d) Existing #buildings# on the #zoning lot#

Where a #zoning lot# contains an existing #building# which exceeds a height limit, an #enlargement# or #development# on such #zoning lot# shall comply with the following provisions:

(1) For each #street frontage zone#, if the existing #building# is not more than 120 feet in height at any point and encroaches into #Zone B# or #Zone C# or beyond the #ten-foot setback line# along the frontage of a #street# 60 feet wide, or if the existing #building# is not more than 150 feet in height at any point and encroaches into #Zone B# or #Zone C# or beyond the #ten-foot setback line# along the frontage of a #street# 75 or more feet in width, the new #building# or #enlargement# is not required to compensate for such #encroachment# by the provision of #compensating recess# areas. #Encroachment# by such an existing #building# into #Zone C# or beyond the #ten-foot setback line# will not subject the new #building# or #enlargement# to the provisions of Section 81-265 unless the new #building# or #enlargement# also encroaches into #Zone C#.

(2) For each #street frontage zone#, space above such existing #building# and within #Zone A# on the #encroachment grid# may count as #compensating recess# area for the new #building# or #enlargement# provided that such space is at or below the lowest level of any compensable #encroachment# by the new #building# or #enlargement#, that it is located within the same #street frontage zone# as that compensable #encroachment#, and that it qualifies in all respects under the provisions of paragraph (c) of this Section (Limitations on #compensating recess#).

(3) For each #street frontage zone#, if an existing #building# more than 120 feet in height at any point encroaches into #Zone B# or #Zone C# or beyond the #ten-foot setback line# along the frontage of a #street# 60 feet wide, or if an existing #building# more than 150 feet in height at any point encroaches into #Zone B# or #Zone C# or beyond the #ten-foot

setback line# along the frontage of a #street# 75 or more feet in width, the #encroachment# of such #building# into #Zone B# or #Zone C# or beyond the #ten-foot setback line# at any height shall be subject to the requirements for #compensating recess# areas set forth in paragraph (b)(1) of this Section, as if it were a new #building#. Where such an existing #building# encroaches into #Zone C# or beyond the #ten-foot setback line#, the provisions of paragraph (f)(2) in Section 81-265 shall apply in addition to the provisions of this Section. (See illustration of Existing Buildings on the Zoning Lot)

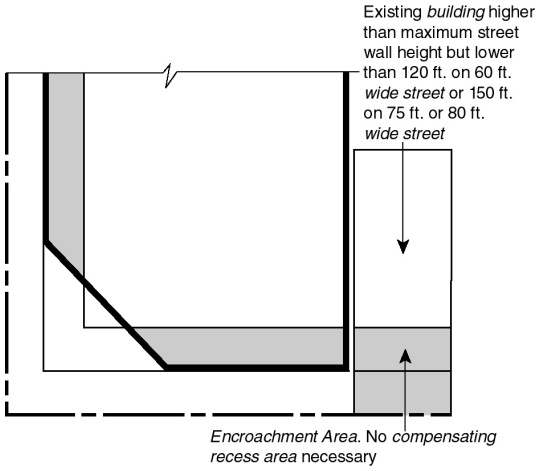

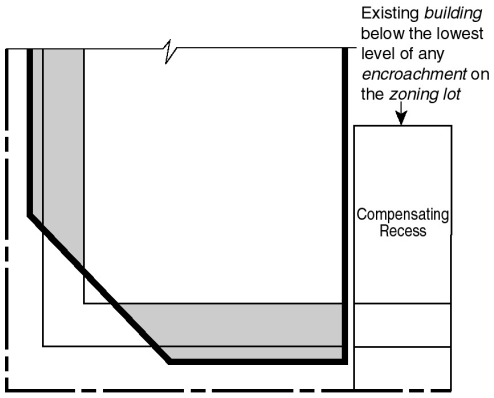

EXISTING BUILDINGS ON THE ZONING LOT

(81-264d3)

81-265 - Encroachment limitations by length and height rules

LAST AMENDED
4/28/1988

Above the maximum height of a front wall at the #street line# as set forth in Section 81-262, a #building# may only encroach beyond the #half-setback line# if it complies with the provisions of this Section and if the area of #compensating recess# equals or exceeds the area of #encroachment# in #Zone B# and #Zone C# in accordance with the provisions of Section 81-264 (Encroachments and compensating recesses).

(a) Special limitations

No #encroachment# beyond the #half-setback line# shall be within 30 feet of a #side lot line#. (See illustration of Prohibited and Allowed Encroachment Beyond Half-Setback Line)

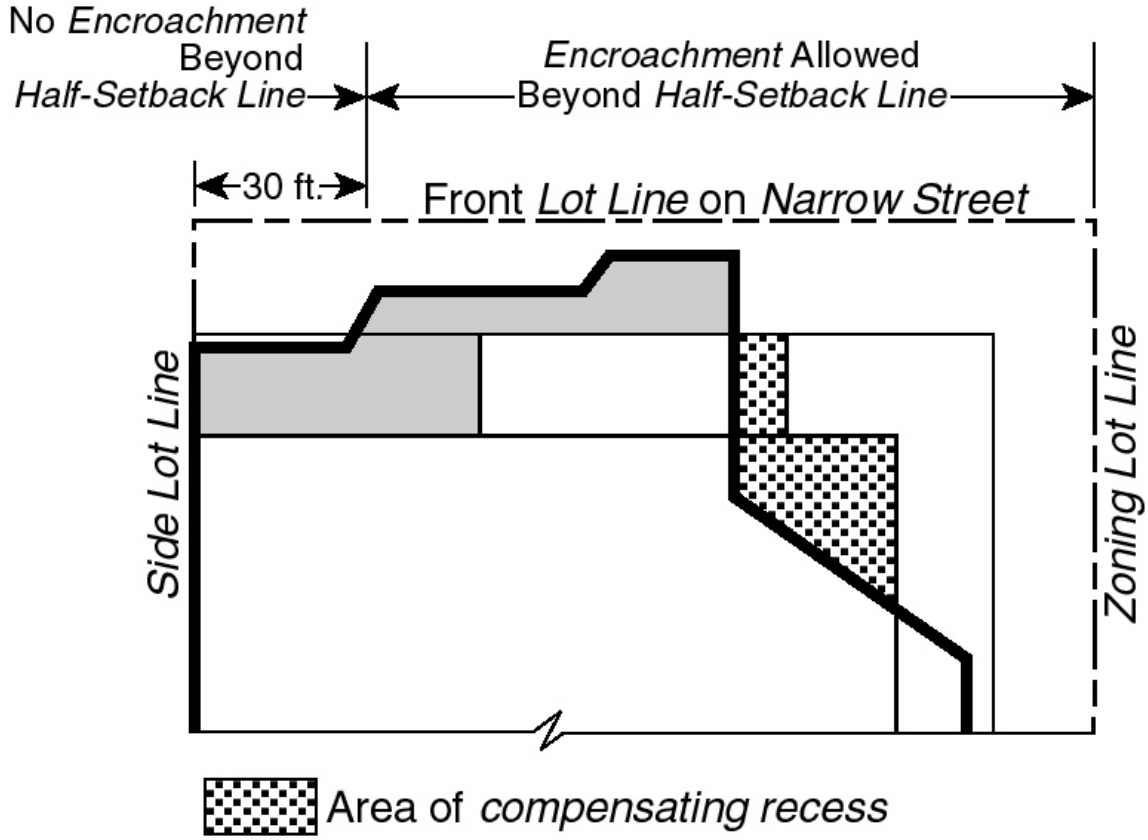

PROHIBITED AND ALLOWED ENCROACHMENT BEYOND

HALF-SETBACK LINE

(81-265a)

(b) General provisions

The length, depth, height and area of #encroachments# along any #street# frontage all contribute to a #building's# impact on daylight access. In order to determine whether the depth of a #building's# #encroachment# into #Zone C# is justified, the length of the #encroachment#, measured parallel to the #street line#, and its height above #curb level# must also be evaluated. The extent of #encroachment# also must be considered in relation to the extent of the area of #compensating recess# in the same #street frontage zone#. The purpose of the length and height rule is to ensure, in the case of #encroachments# beyond the #half-setback line#, that the closer a #building# comes to the #street line#, the less will be the length of its #encroachment#, its height or both. (See illustration of Elements Analyzed)

The elements comprising this analysis are represented by symbols and are as follows:

(1)

De	=	depth of #encroachment#
D		depth of #setback line#

De (depth of #encroachment#) means depth of #encroachment# beyond the #setback line#. Depth of #encroachment# is measured perpendicularly to the #setback line#.

D (depth of #setback line#) means depth of #setback line# from the #street line# or depth of #ten-foot setback line# from the #street line#, whichever depth is greater.

(2)

Le	=	length of #encroachment#
L		length of #front lot line#

Le (length of #encroachment#) means total length of #encroachment# outside the #half-setback line#. Length of #encroachment# is measured as the total length of the #encroachments'# projections on the #street line#.

L (length of #front lot line#) means the length of the #front lot line# along the particular #street#. However, the length of the #front lot line# for the purposes of this Section shall not exceed 300 feet, irrespective of the actual #lot line# length.

(3)

Le	=	length of #encroachment#
Lr		length of recess

Le (length of #encroachment#) as defined in paragraph (b)(2) of this Section.

Lr (length of recess) means total length of #setback line# not encroached upon by a #building#.

(4)

H	=	height of #encroachment#
L		length of #front lot line#

H (height of #encroachment#) means the height of the #encroachment# above #curb level#.

L (length of #front lot line#) as defined in paragraph (2) of this Section.

(5)

Ar	=	area of #compensating recess#
Ae		area of #encroachment#

Ar (area of #compensating recess#) means area of #compensating recess# in the particular #street frontage zone#. Area of #compensating recess# is calculated to a depth of 100 feet from the #street line#.

Ae (area of #encroachment#) means area of #encroachment# beyond the #setback line#. Area of #encroachment# is calculated to a depth of 100 feet from the #street line#.

Values for the elements in paragraphs (b)(1) through (b)(5) shall be found for each #street frontage zone# on which there is any #encroachment# beyond the #half-setback line#.

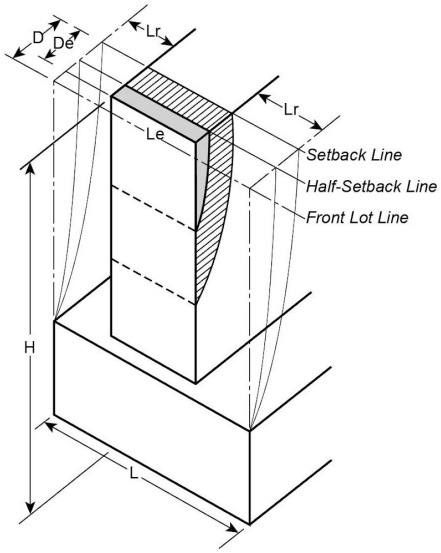

L – Length of *front lot line* along the particular *street*

Le – Length of *encroachment* outside *half-setback line* or *ten-foot setback line*

Lr – Total length of *setback line* not encroached by *building*

De– Depth of *encroachment*

D – Depth of *setback line*

H – Height of *encroachment* above *curb level*

ELEMENTS ANALYZED

(81-265b)

The elements, weighted according to the effects on daylight access, are represented in the formulas and charts that control the depth, length and height of #encroachments#, as set forth in paragraph (c) of this Section.

#Encroachments# of proposed #buildings# or #enlargements# beyond the #half-setback line# are permitted only if in compliance at every point with the formulas in paragraph (c) of this Section. Aside from this general requirement, specified points at which the length, depth, height and area rules shall be applied are presented in paragraphs (d) and (e) of this Section.

(c) #Encroachment# limitations by Formulas 1 and 2

Where applicants elect to have their #buildings# regulated by the formulas, #buildings# shall comply with both Formula 1 and Formula 2 as set forth in this paragraph. Elements of the formulas and the symbols by which they are represented are as set forth in paragraph (b) of this Section.

Formula 1:

	Maximum	H	=	5.5—4	(	De	)	—2.5	(	Le	)
		L				D				L	

Formula 2:

Minimum		Lr	=	L
				3.5

The maximum height of #encroachment# (H) allowed by Formula 1 may be modified for certain conditions, as follows:

(1) For short frontages

For any frontage less than 200 feet in length, the maximum

$$\frac{H}{L}$$

found by applying Formula 1 may be increased by the following multiplier:

$$2 - \frac{L}{200}$$

(2) For large areas of #compensating recess#

To the extent that the aggregate area of #compensating recess# (Ar) exceeds the aggregate area of #encroachment# (Ae), the maximum

$$\left(\frac{H}{L}\right)$$

found by applying Formula 1 may be increased by the following multiplier:

$$1 + \frac{.067\ Ar}{Ae}$$

For the purposes of this modification, the measurement of the area of #compensating recess# (Ar) and the area of #encroachment# (Ae) in each particular #street frontage zone# shall be made on the #encroachment grid# at the height level for which #encroachments# beyond the #half-setback line# are checked. The #encroachment grid# shall include all #street frontage zones#. (Ar) shall include all areas of #compensating recess# in the particular #street frontage zone#, whether or not connected, and (Ae) shall include all #encroachments# in both #Zone B# and #Zone C# in the same #street frontage zone#, whether or not such #encroachments# are connected.

(d) Measurement of #encroachments#

The points at which the formulas are applied will depend upon the shape and dimensions of the #encroachments# beyond the #half-setback line# and shall be in accordance with the provisions of this paragraph and paragraph (e) of this Section.

Where the #encroachments# along a single #street# frontage are not connected outside the #half-setback line#, each #encroachment# shall be measured separately in accordance with the provisions of paragraph (e). However, at any given height, where such non-contiguous #encroachments# occur, the #encroachments# shall be examined together, and the length of #encroachment# (Le) shall be the total of the (Le) for the individual #encroachments#. (See illustration of Non-contiguous #Encroachments#)

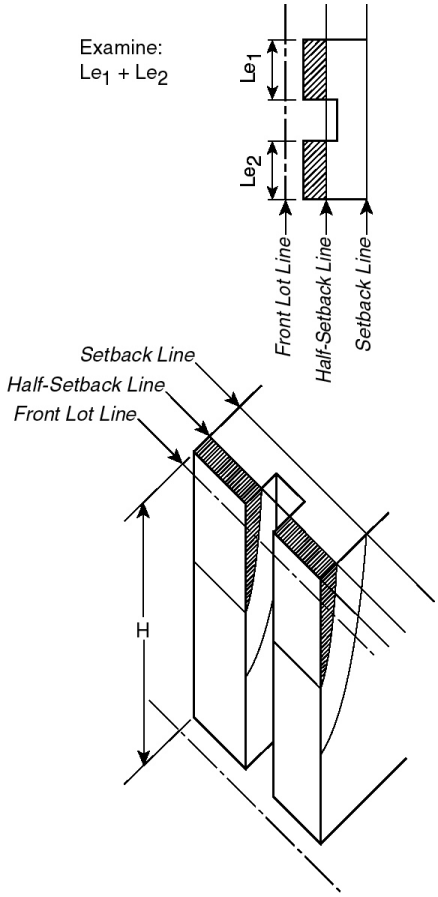

NON-CONTIGUOUS ENCROACHMENTS

(81-265d)

(e) Heights and depths at which formulas are applied

Heights and depths at which the formulas shall be applied are set forth in this paragraph. In addition to meeting the requirements of paragraphs (e)(1) and (e)(2) of this Section, the applicant shall demonstrate that there is no height at which the proposed #building# or #enlargement# fails to comply with the formulas in paragraph (c) of this Section.

(1) Standard requirement where length of #encroachment# is uniform

Where the length of the #encroachment# (Le) is uniform for the entire height of the #encroachment# (H) and the entire depth (De) at every height, the length, depth and height rules expressed in the formulas shall be applied only at the height where (De/D) is greatest and at the outermost edge of the #encroachment#. (See illustration of Uniform Length of #Encroachment#)

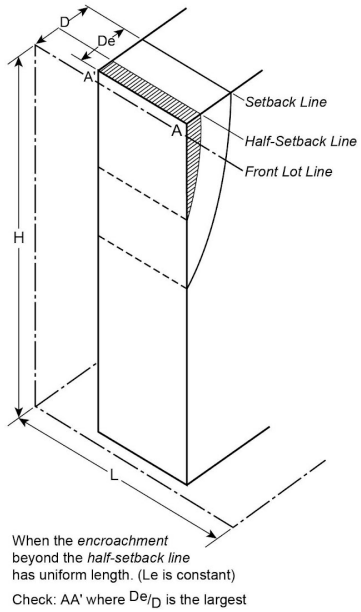

UNIFORM LENGTH OF ENCROACHMENT

(81-265e1)

(2) Standard requirement where length of #encroachment# is not uniform

Where the length of the #encroachment# (Le) is not uniform, the rules shall be applied at the height level where (De/D) is greatest and also at the height level where the length of #encroachment# (Le) is greatest. If the greatest length of #encroachment# is uniform for part of the #building's# height, the rules shall be applied at the highest level at which such greatest length of #encroachment# occurs. (See illustrations Where Length of #Encroachment# Is Not Uniform).

If for a particular height level, the length of the #encroachment# (Le) varies with the depth of the #encroachment# (De), the largest (Le) of this #encroachment# shall be used together with the largest (De) in applying the rules as if the #encroachment# were of uniform length as provided in paragraph (e)(1) of this Section.

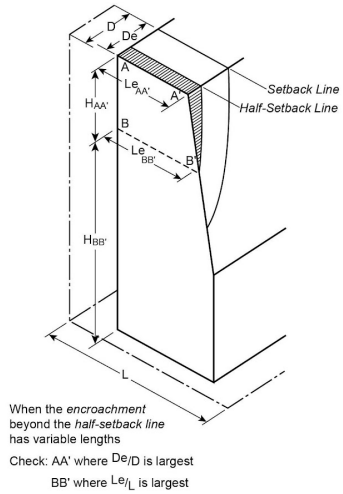

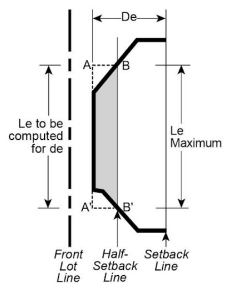

WHERE LENGTH OF ENCROACHMENT IS NOT UNIFORM

(81-265e2)

(f) #Encroachments# by existing #buildings#

When a #zoning lot# contains an existing #building# which encroaches beyond a #half-setback line# or a #ten-foot setback line#, an #enlargement# or #development# on such #zoning lot# shall comply with the following provisions:

(1) Existing #buildings# below specified heights

(i) Except as provided in paragraph (f)(1)(ii) of this Section, an existing #building# not more than 120 feet in height shall not be considered in applying the length and height rules even though a portion of such #building# encroaches beyond the #half-setback line# or #ten-foot setback line# along a 60 foot wide #street# and an existing #building# not more than 150 feet in height shall not be considered in applying the length and height rules even though a portion of such #building# encroaches beyond the #half-setback line# or #ten-foot setback line# along a #street# 75 or more feet in width.

(ii) However, the area occupied by the existing #building# shall be included in the calculation of (Ar/Ae) for the modification of Formula 1 allowed in the case of large areas of #compensating recess#, as set forth in paragraph (c)(2) of this Section.

(2) Existing #buildings# above specified heights

Where an existing #building# more than 120 feet in height encroaches beyond the #half-setback line# or #ten-foot setback line# along a 60-foot wide #street# or where an existing #building# more than 150 feet in height encroaches beyond the #half-setback line# or #ten-foot setback line# along a #street# 75 or more feet in width, the following provisions, in addition to those of paragraph (d)(3) of Section 81-264 (Encroachments and compensating recesses), shall apply:

(i) no new construction on the #zoning lot# shall encroach beyond the #half-setback line# along any #street#, and

(ii) the length and height rules of this Section shall not apply.

81-266 - Special permit for height and setback modifications

LAST AMENDED
4/28/1988

In C5-3, C6-6 or C6-7 Districts, where a special permit application is made pursuant to Section 74-71 (Landmark Preservation) for modification of #bulk# regulations on a #zoning lot# containing a landmark, or where a special permit application is made pursuant to Section 74-79 for transfer of development rights from a landmark site and the #floor area# represented by such transferred development rights exceeds 20 percent of the basic maximum #floor area# permitted on the #zoning lot# receiving the development rights, such application may include a request for modification of the height and setback regulations set forth in Sections 81-261 to 81-265, inclusive, relating to Height and Setback Regulations - Daylight Compensation. The City Planning Commission may authorize such height and setback modifications subject to the following conditions:

(a) the applicant shall demonstrate to the satisfaction of the Commission that a feasible design for the proposed #development# or #enlargement# which accommodates the permitted #floor area# is not possible under the provisions of Sections 81-261 to 81-265, inclusive, and shall further indicate for the proposed design where and to what extent deficiencies of #compensating recess# are necessary or compliance with the length and height rules is not possible. Scale drawings shall be used in presenting the analyses required herein; and

(b) the Commission shall make the following findings in addition to any required under the applicable provisions of Section 74-71 or Section 74-79:

(1) that the requested departure from the height and setback regulations is the minimum amount necessary to achieve a feasible #building# design;

(2) that the disadvantages to the surrounding area resulting from reduced light and air access will be more than offset by the advantages of the landmark's preservation to the local community and the City as a whole; and

(3) that where the landmark is located on the #zoning lot# proposed for #development# or #enlargement# or on a lot contiguous thereto or directly across a #street# therefrom, the modification of height and setback regulations will adequately protect the setting for the landmark.

81-27 - Alternate Height and Setback Regulations - Daylight Evaluation

LAST AMENDED
8/9/2017

81-271 - Definitions

LAST AMENDED
8/9/2017

Center line of the street (bounding a #zoning lot#)

A line equidistant from and parallel or nearly parallel to the #street lines# on both sides of the #street#. However, for the purposes of daylight evaluation:

(a) on a #street# 75 feet in width, the #center line of the street# shall be considered to be a line 40 feet from, and parallel to, the #front lot line# of the #zoning lot#; and

(b) on a #street# more than 100 feet in width, the #center line of the street# shall be considered to be a line 50 feet from, and parallel to, the #front lot line# of the #zoning lot#.

Daylight Evaluation Chart (DEC)

A graphic tool which permits objective measurements of portions of sky blocked by a #building# when it is viewed from a #vantage point#. There are three #daylight evaluation charts# for use with #street# widths of 60 feet, 75 to 80 feet and 100 feet and over, respectively. All #buildings# are drawn on the appropriate #daylight evaluation chart# to evaluate their compliance with the regulations of Section 81-27 (Alternate Height and Setback Regulations—Daylight Evaluation). These three #daylight evaluation charts# are in Appendix B of this Chapter. A fourth chart in Appendix B is available for use with #qualifying sites# in the East Midtown Subdistrict, as defined in Section 81-613, with frontage along Park Avenue.

Far lot line

A #lot line# intersecting the #street line# of the #vantage street# such that, when viewed from the #vantage point#, the #zoning lot# does not contain any #lot area# that is on the far side of and immediately adjoining the #lot line# at its intersection with the #street line#. (See illustration of #Far Lot Line# and #Vantage Point#)

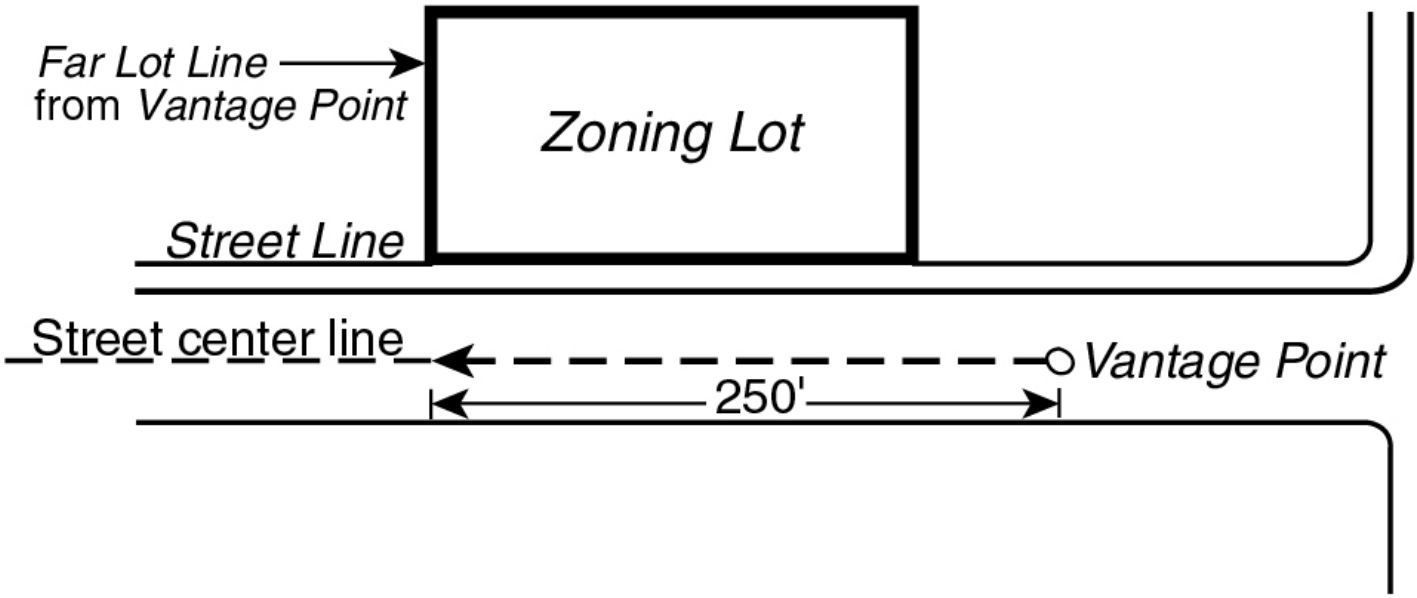

FAR LOT LINE AND VANTAGE POINT

(81-271.1)

Near lot line

A #lot line#, other than the #far lot line#, which intersects the #street line# of the #vantage street# and which defines the extent of the #zoning lot's# continuous frontage along the #vantage street# from the #far lot line#.

Profile curve

A curved line on the #daylight evaluation chart# rising from the intersection of the curved line representing an elevation angle of 72 degrees with the vertical line at the #far lot line#. The #profile curve# is used to evaluate a #building's# obstruction of the sky as seen in profile from the #vantage point#.

Profile encroachment

The space on the #daylight evaluation chart# which, when viewed from the #vantage point#, is on the far side of the #profile curve# and which is blocked by the projection of the #building# on the #daylight evaluation chart#. (See illustration of #Profile Encroachment#)

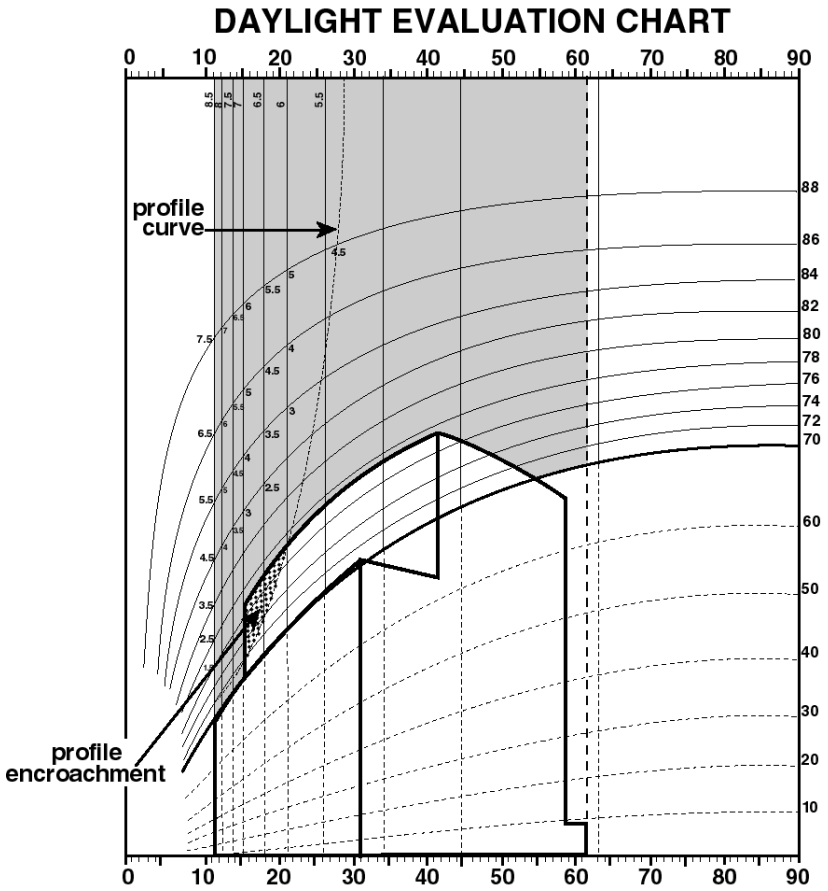

PROFILE ENCROACHMENT

(81-271.2)

Vantage point

A point on the #center line of the street# bounding the #zoning lot# and located 250 feet from the intersection of the extension of the #zoning lot's# #far lot line# with the #center line of the street#. (See illustration of #Far Lot Line# and #Vantage Point#)

Vantage street

A #street# bounding the #zoning lot# and on the center line of which a #vantage point# is located.

81-272 - Features of the Daylight Evaluation Chart

LAST AMENDED
2/2/2011

The #daylight evaluation chart (DEC)# is a graphic representation of a pedestrian's field of view as he or she looks down a #street# and sweeps his or her view 90 degrees to the left or to the right.

Under special conditions, this view can be extended to 180 degrees horizontally as specified in Section 81-275 (Special conditions).

This pedestrian view is based on a #vantage point# located 250 feet from the intersection of the #zoning lot's# #far lot line# with the #center line of the street#.

There are three #daylight evaluation charts# for use with different Midtown #street# widths. They include a chart for 60-foot wide #streets# (for most east-west crosstown #streets#) as well as a chart for 75-foot or 80-foot wide #streets# and a chart for #streets# 100 feet or more in width (for avenues and major crosstown #streets#). All of these charts have the following features:

(a) Horizontal and vertical axes

The #daylight evaluation chart# has both a horizontal and vertical component, encompassing views sweeping both 90 degrees horizontally and 90 degrees vertically. (See illustration of Horizontal and Vertical Angles of View)

Under special conditions, this view can be extended to 180 degrees horizontally as specified in Section 81-275.

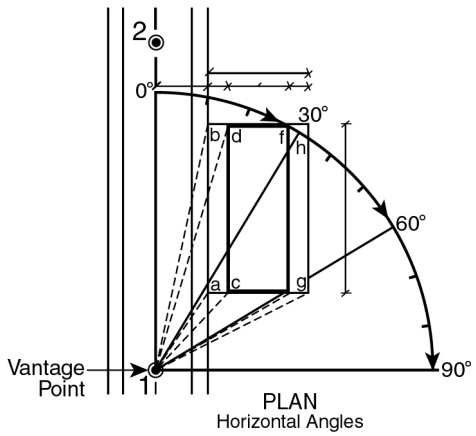

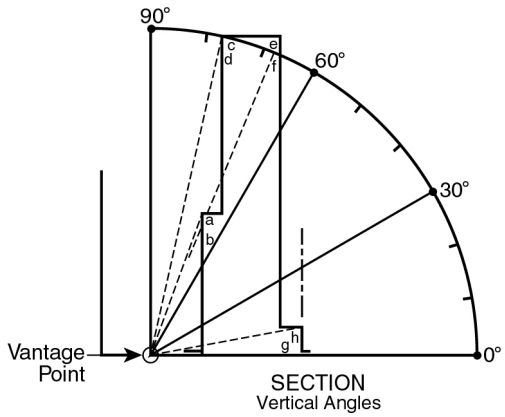

HORIZONTAL AND VERTICAL ANGLES OF VIEW

(81-272a.1)

The horizontal axis of the #daylight evaluation chart# is measured in degrees of arc from zero degrees to 90 degrees starting from the #vantage point# along the #center line of the vantage street# and sweeping toward the #building#.

The horizontal axis is intersected by vertical lines corresponding to lines of sight from the #vantage point# to points 25 feet apart on the #front lot line# along the #vantage street# measured from the intersection of the #far lot line# with the #street line# of the #vantage street#.

The vertical axis of the #daylight evaluation chart# is measured in degrees of arc from zero degrees to 90 degrees starting from the #center line of the vantage street# at #curb level# and sweeping upward.

The vertical axis is intersected by curved elevation lines representing elevation angles from the #center line of the street# at 10 degree intervals from zero degrees to 70 degrees and at two degree intervals from 70 degrees to 90 degrees. (See illustration of Horizontal and Vertical Axes)

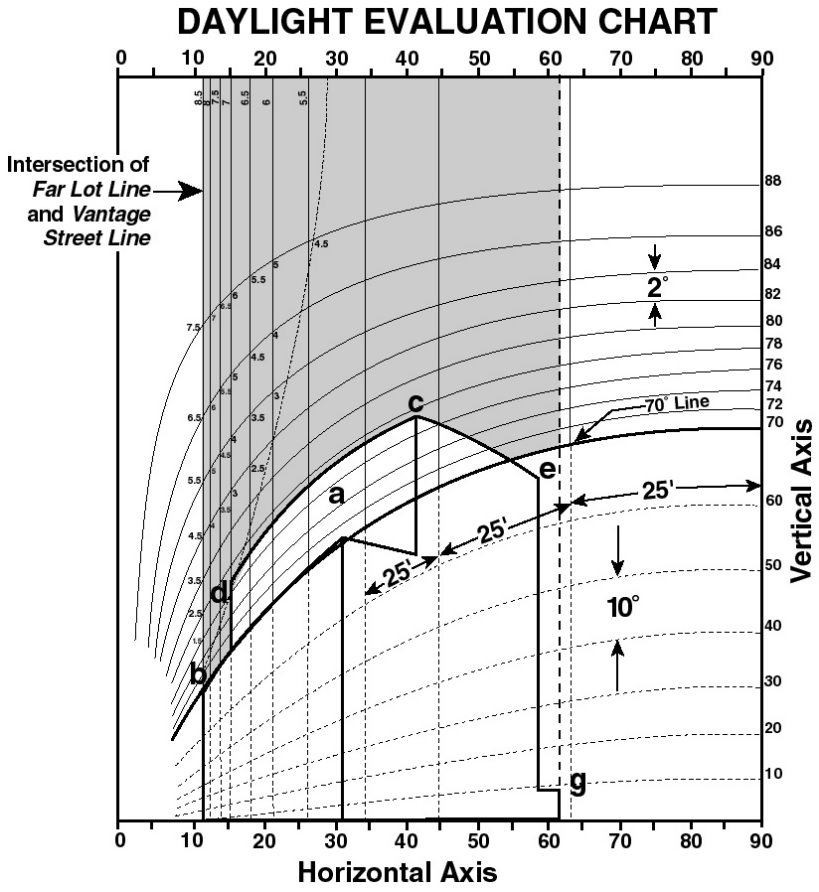

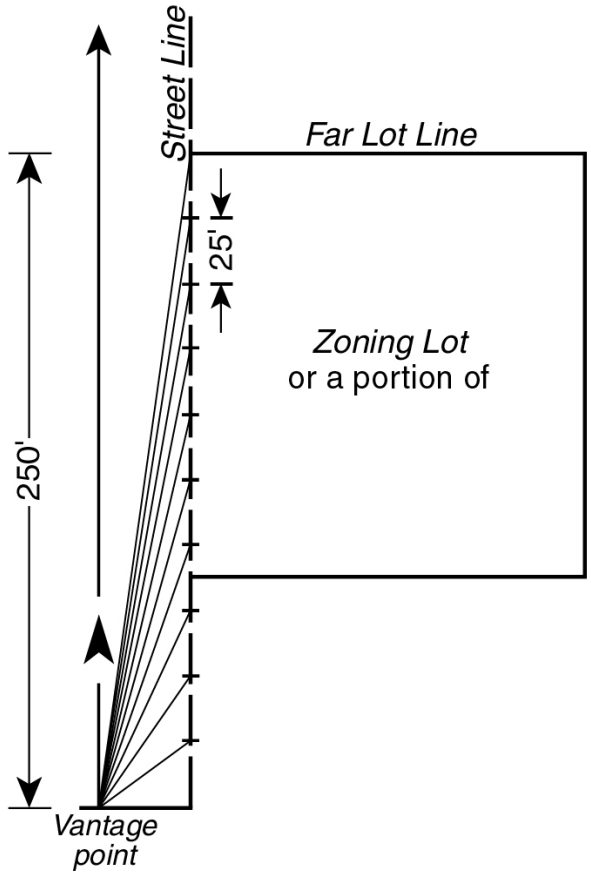

HORIZONTAL AND VERTICAL AXES

(81-272a.2)

(b) Daylight squares

The horizontal and vertical lines form a curvilinear grid dividing the #daylight evaluation chart# into areas called daylight squares. Above the 70 degree line, the grid is divided into 100 daylight squares starting from the vertical line rising from the intersection of the #far lot line# with the #street line# of the #vantage street# and ending at the vertical line representing 90 degrees along the horizontal axis. Each of these 100 squares represents 25 feet of lot frontage on the #vantage street# and two degrees of elevation angle from the #center line of the vantage street#.

Below 70 degrees, the grid is divided into 70 daylight squares starting from the vertical line rising from the intersection of the #far lot line# with the #street line# of the #vantage street# and ending at the vertical line rising at 90 degrees along the horizontal axis. Each of these 70 squares represents 25 feet of lot frontage on the #vantage street# and 10 degrees of elevation angle from the #center line of the street#. (See illustration of Daylight Squares)

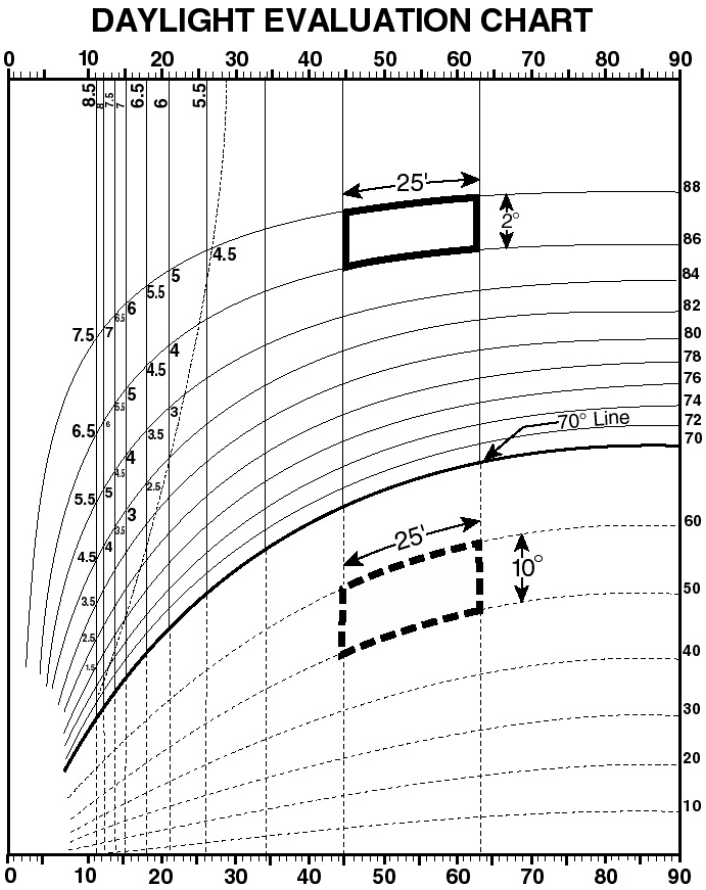

DAYLIGHT SQUARES

(81-272b)

(c) Daylight subsquares

For greater plotting and scoring precision, the horizontal axis of the grid is further subdivided by vertical lines at points five feet apart on the #front lot line# as seen from the #vantage point#. The vertical axis is further subdivided by curved lines representing lines of equal elevation at one degree intervals from 70 degrees to 90 degrees. Therefore, each daylight square is subdivided into 10 subsquares, each representing five feet of lot frontage on the #vantage street# and one degree of elevation angle from the #center line of the vantage street#. (See illustration of Daylight Squares and Subsquares Above 70 Degrees)

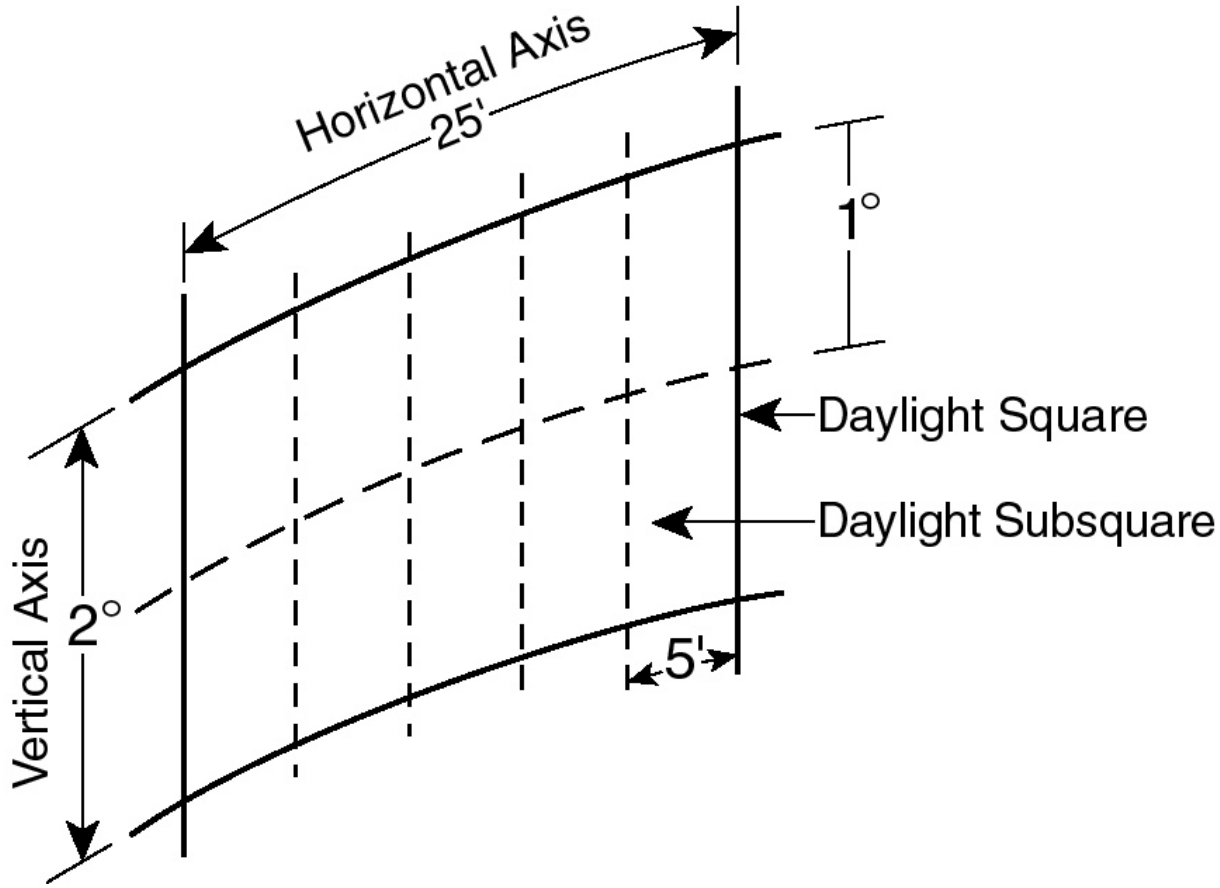

DAYLIGHT SQUARES AND SUBSQUARES ABOVE 70 DEGREES

(81-272c)

(d) The seventy degree line

Research shows that, as an average, 70 degrees is the elevation angle at which #buildings# in the #Special Midtown District# are set back from the #street line#. Most of the daylight below 70 degrees is blocked by such #buildings#. Slabs, towers or other setback portions of #buildings# rise to block an average of 25 percent of the available daylight squares above 70 degrees.

In #building# evaluation, the #DEC# measures the blocked sky above 70 degrees. Below 70 degrees, #buildings# are given credit for unblocked daylight.

(e) The #profile curve#

The grid is traversed by the #profile curve#, which rises from the intersection of the curved line representing an elevation angle of 72 degrees with the vertical line at the #far lot line#. The #profile curve# is derived from the predominant built character of developed Midtown #streets# as seen in profile. #Encroachment# across the #profile curve# is penalized to discourage canyon-like Midtown #streets# and to protect neighboring #buildings#.

81-273 - Rules for plotting buildings on the daylight evaluation chart

LAST AMENDED
2/2/2011

Evaluation of a #development# or #enlargement# requires drawing the new #buildings#, remaining #buildings# and open areas on the #zoning lot# on the appropriate #daylight evaluation chart (DEC)#, as viewed from each required #vantage point# and then scoring the #zoning lot#. The rules for plotting #buildings# on the #DEC# are set forth in the following paragraphs of this Section and illustrated by an example of a #building# which fronts on a 100-foot wide #street# and occupies a site 170 feet long by 100 feet deep.

(a) Draw the #building#

Draw the #building# in plan showing all #street# frontages of the #zoning lot#. Draw the #building# in section perpendicular to each #street# on which the #zoning lot# fronts. On both plan and section drawings label all corners of the #building#. In the example they are labeled corners (a) through (h). (See illustrations of Example: Building Drawings)

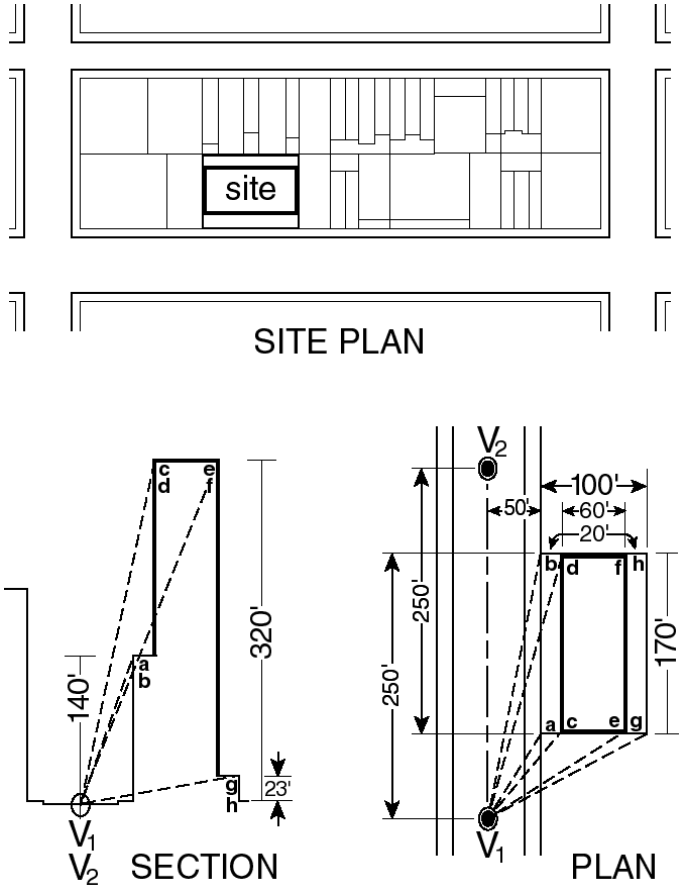

EXAMPLE: BUILDING DRAWINGS

(81-273a)

(b) Establish #vantage points#

Establish on the plan all the #vantage points# from which views must be taken. #Vantage points# shall be established on the #center line of the vantage street# 250 feet from the intersection of the #zoning lot's# #far lot line# and the #center line of the street#. For each #vantage street# there are at least two #vantage points#. In the example, they are V1 and V2. For each #vantage point# there shall be a separate #daylight evaluation chart#. The example will use #vantage point# one.

(c) Record plan and section dimensions

Record on a coordinate chart for each corner of the #building# the following dimensions:

(1) Dimensions in plan:

The distance (S) between the corner and the #center line of the street# as measured along a line that intersects the #center line of the street# at right angles. In the example, distance (S) of corner (b) + 50 feet.

The distance (D) measured along the #center line of the street# from the #vantage point# to the point where the #street# center line is intersected by the perpendicular line from the corner. In the example, distance (D) of corner (b) + 250 feet.

(2) Dimension in section:

The height (H) of the corner above #curb level#. In the example, height (H) of corner (b) + 140 feet.

(d) Calculate plan and section angles

Determine the plan and section angles for each corner of the #building# as viewed from the #vantage point#.

(1) A plan angle is an angle on the plan formed at the #vantage point# by the line of sight to a corner of the #building# and the #center line of the vantage street#. The plan angle is found by calculating the tangent. The tangent is the quotient found by dividing distance (S) by distance (D). The plan angle for the resulting tangent is found in a tangent table and is then entered on the coordinate chart in the column marked "plan angles."

(2) The section angle is an angle formed by a line representing the distance in section from a corner of the #building# to the #center line of the vantage street# and a line representing the distance in plan (S) between the corner and the #center line of the street#. The section angle is found by calculating its tangent. The tangent is the quotient obtained by dividing the height of the corner (H) by its horizontal distance (S) from the #center line of the street#.

The section angle for the resulting tangent is found in a tangent table and is then entered on the coordinate chart in the column market "section angles."

EXAMPLE OF COORDINATE CHARTS

Plan Angles

Point	Distance (S) from #Street# Center Line (in feet)	Distance (D) from #Vantage Point# 1 (in feet)	Tangent (S÷D) of Angle	Angle
a	50	80	50/80 = 0.63	32.0°
b	50	250	50/250 = 0.20	11.3°
c	70	80	70/80 = 0.87	41.2°
d	70	250	70/250 = 0.28	15.6°
e	130	80	130/80 = 1.63	58.4°
f	130	250	130/250 = 0.52	27.5°
g	150	80	150/80 = 1.88	61.9°
h	150	250	150/250 = 0.60	31.0°

Section Angles

Point	Height (H) Above #Curb Level# (in feet)	Distance (S) from #Street# Center Line (in feet)	Tangent (H÷S) of Angle	Angle
a & b	140	50	140/50 = 2.80	70.3°
c & d	320	70	320/70 = 4.57	77.7°
e & f	320	130	320/130 = 2.46	67.9°
g & h	23	150	23/150 = 0.15	8.7°

(e) Plot corner coordinates

Plot each corner of the #building# onto the #daylight evaluation chart# at the point where the coordinates for that corner intersect. The plan angle coordinates are found on the horizontal axis of the chart and the section angle coordinates are found on the vertical axis. The points plotted are then connected to represent the edges of the #building# as shown on the plan and section drawings. A connecting line parallel to the #street line# of the #vantage street# is drawn as a curve parallel to the closest elevation line. A connecting line perpendicular to the #street line# of the #vantage street# is drawn parallel to the closest dotted elevation line, which is perpendicular to the #street#. A connecting line which is neither parallel nor perpendicular to the #vantage street# is approximated on the chart by:

(1) establishing points along the line in plan at 10-foot intervals;

(2) finding the coordinates of the points and plotting them on the chart; and

(3) connecting the resulting points.

The connecting lines produce a curvilinear perspective drawing of the #building# as seen from the #vantage point# projected onto the #daylight evaluation chart#. Since in the example #vantage point# one is on a 100 foot wide #street#, corner coordinates are plotted on a #daylight evaluation chart# for 100 foot wide #streets#. In the example, corner (b) is at the intersection of plan angle 11.3° and section angle 70.3° (See illustration of Building as Drawn on the Daylight Evaluation Chart)

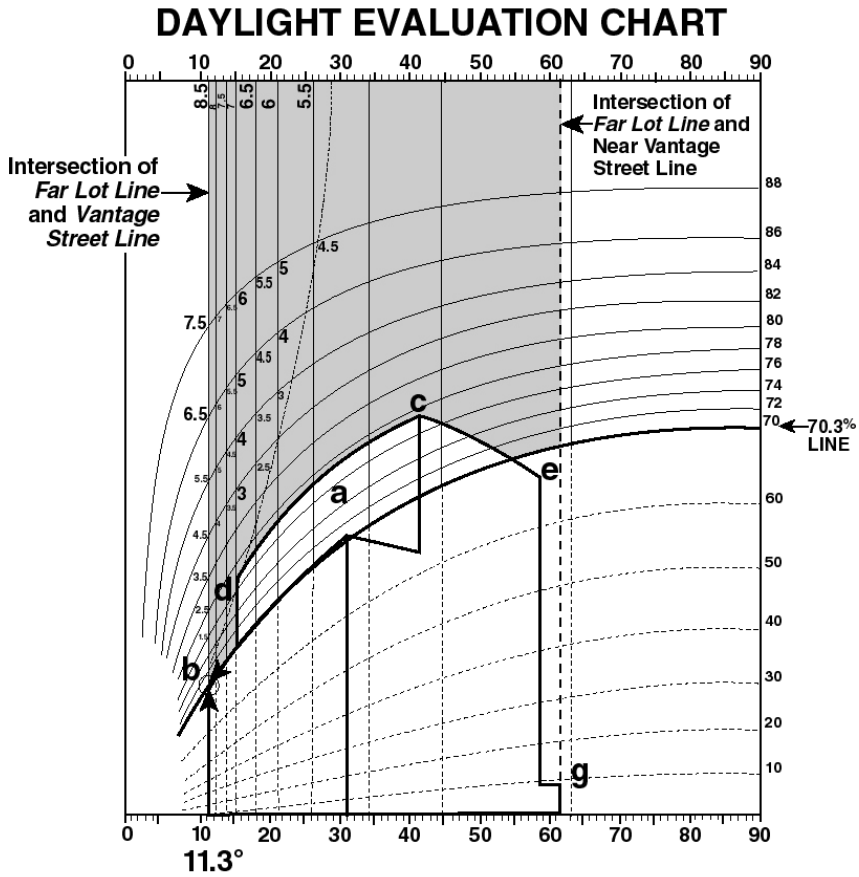

BUILDING AS DRAWN ON THE DAYLIGHT EVALUATION CHART

(81-273e)

(f) Determine daylight boundaries

Draw a vertical line on the chart rising from the intersection of the #near lot line# of the #zoning lot# with the center line of the #block# or with a line 100 feet distant from and parallel to the #front lot line# on the #vantage street#, whichever line is closer to the #vantage street#. This line and the #far lot line# represent the boundaries of the potential sky area that the #building# could block. (See illustration of Building as Drawn on the Daylight Evaluation Chart)

81-274 - Rules for determining the daylight evaluation score

LAST AMENDED
2/2/2011

A #zoning lot# is scored by determining the number and the value of the daylight squares the #building# blocks when viewed from the #vantage point#, compared to the total number of daylight squares available within the daylight boundaries as determined in paragraph (f) of Section 81-273 (Rules for plotting buildings on the daylight evaluation chart) and above an elevation angle of 70 degrees.

(a) Assign daylight values

The daylight squares on the #daylight evaluation chart# are each assigned a value.

(1) Except along #vantage streets# designated for #street wall# continuity (see Section 81-43), each unblocked daylight square below the curved line representing an elevation of 70 degrees has a positive value of 0.3 and each unblocked subsquare below the same curved line has a positive value of 0.03.

(2) Each blocked daylight square above the curved line representing an elevation of 70 degrees has a negative value of 1.0.

(3) Where a #building# blocks any portion of a subsquare the #building# is charged with blocking the entire subsquare in computing the daylight evaluation score. Each blocked subsquare has a negative value of 1.0/10 or 0.1.

(4) The daylight squares and subsquares which are on the far side of the #profile curve# are assigned additional weighted values set forth on the chart below. (See illustration of #Profile Encroachment# Incurring Profile Penalty)

Degrees of Elevation	Distance from #Far Lot Line#							
	1st 25ft	2nd 25ft	3rd 25ft	4th 25ft	5th 25ft	6th 25ft	7th 25ft	8th 25ft
88 to 90	8.5	8.0	7.5	7.0	6.5	6.0	5.5	5.0
86 to 88	7.5	7.0	6.5	6.0	5.5	5.0	4.5	4.0
84 to 86	6.5	6.0	5.5	5.0	4.5	4.0	3.5	-
82 to 84	5.5	5.0	4.5	4.0	3.5	3.0	2.5	-
80 to 82	4.5	4.0	3.5	3.0	2.5	2.0	1.5	-
78 to 80	3.5	3.0	2.5	2.0	1.5	1.0	-	-
76 to 78	2.5	2.0	1.5	1.0	.5	-	-	-
74 to 76	1.5	1.0	.5	.5	-	-	-	-
72 to 74	.5	.5	.5	-	-	-	-	-

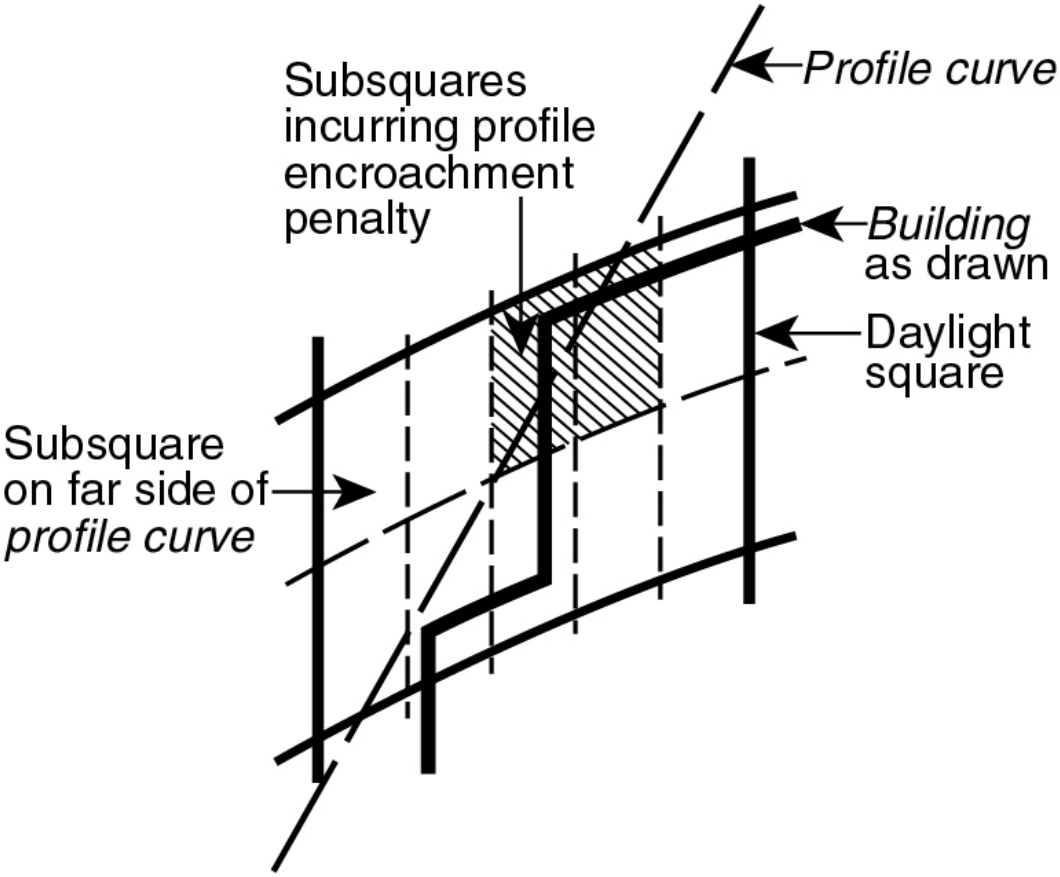

PROFILE ENCROACHMENT INCURRING PROFILE PENALTY

(81-274a)

(5) If the #building# encroaches beyond the #profile curve#, the entire subsquare in which the #profile encroachment# is located is given an additional weighted value. The total penalty is the additional weighted value of the daylight square multiplied by the negative value of the subsquare. The penalty is applied even if the subsquare does not lie entirely beyond the curve.

(b) Calculate daylight blockage

Count the number of blocked daylight squares and subsquares which are above the curved line representing an elevation of 70 degrees. A negative sign is to be given to this number. Total value of daylight blockage in the example is -20.5.

(c) Calculate unblocked daylight credit

Count the number of unblocked daylight squares which are below the curved line representing an elevation of 70 degrees and within the area defined by the intersection of the #far lot line# with the #street line# of the #vantage street# and the intersection of the #near lot line# with the #street line# of the #vantage street#. The total is given a positive value and multiplied by 0.3, the value of these daylight squares. This provision is not applicable where the #vantage street# is a designated #street# on which #street wall# continuity is required by the provisions of Section 81-43 (Street Wall Continuity Along Designated Streets). In the example, the number and value of squares unblocked below 70 degrees = +0.0.

(d) Calculate profile daylight blockage

Count the number of blocked daylight squares which are entirely on the far side of the #profile curve# when viewed from the #vantage point# and the number of blocked or partially blocked subsquares which are on the far side of the #profile curve#. All of these daylight squares and subsquares are given a negative sign, multiplied by their respective weighted values in the table in paragraph (a)(4) of this Section and the products added. Subsquares are counted as one tenth of a daylight square. In the example,

the total value of profile daylight blockage = -0.45.

(e) Calculate available daylight

Count the number of daylight squares available to the site. This is the total number of daylight squares and subsquares, calculated to the nearest tenth, that are above the curved line representing the boundaries of the potential sky area available to the site, said boundaries being delineated in accordance with the provisions of paragraph (f) of Section 81-273 (Rules for plotting buildings on the daylight evaluation chart). Available daylight in the example is 89.9.

(f) Calculate daylight remaining

Calculate the remaining or unblocked daylight by adding the results of paragraphs (b) through (e) of this Section. Daylight remaining in the example is (-20.5) + (0.0) + (-0.45) + (89.9) = 68.95.

(g) Calculate daylight score

Compute the remaining daylight score from paragraph (f) of this Section, as a percentage of the available daylight from paragraph (e) of this Section. The percentage is the daylight score for the proposed #building# from that #vantage point#. In the example, the daylight score is 68.95/89.9 = 76.70 percent for #vantage point# one (V1).

(h) Calculate overall daylight score

(1) The street score is the arithmetic mean of all the scores from all #vantage points# along a #vantage street#. When a #zoning lot# fronts on only one #street#, the street score is also the overall score. Where a #zoning lot# has more than one #street# frontage along any one #vantage street#, the street score is the average of all those individual #street# frontage scores computed pursuant to paragraph (b) of Section 81-275 (Special conditions), weighted by the lengths of all those #street# frontages.

(2) Where a #zoning lot# fronts on more than one #street#, the overall score is the average of the street scores, weighted by the length of their respective #vantage street# frontages.

(i) The passing score

To be in compliance with these regulations, a #zoning lot# must have an overall score of not less than 75 percent, with no single #street# frontage having a street score of less than 66 percent. If a #zoning lot# fronts only on one #street#, a daylight evaluation score of not less than 75 percent is required for that #street# frontage. If a street score is less than 66 percent, or if the overall daylight score is less than the passing score of 75 percent, a modest improvement in either the street score or the overall score may be obtained by scoring the relative reflectivity of the #building's# surface, as specified in Section 81-276 (Modification of score for reflectivity). The passing daylight score of 75 percent is equivalent to the average daylight levels of Midtown #buildings# built as-of-right under the 1916 and 1961 Zoning Resolutions. The minimum requirement of 66 percent on one frontage is equivalent to the daylight level of any #interior lot# #building# built in Midtown under the 1916 Zoning Resolution in a two-times height district. However, if any one frontage is less than 75 percent, other frontages must be greater than 75 percent to reach the passing overall daylight score. This allows flexibility in #building# design while maintaining daylight standards within the levels established by #buildings# built as-of-right under the 1916 and 1961 Zoning Resolutions. (See illustration of Daylight Evaluation Score Results)

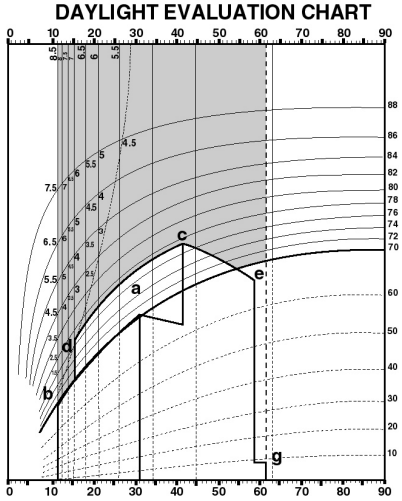

SCORING SUMMARY
(Vantage point one)

SECTION		SCORE
81-274 (b)	Squares above 70° blocked	–20.5
81-274 (c)	Squares below 70° open	+ 0.0
81-274 (d)	Profile encroachment penalty .1 x 1.5 = .15 .3 x 1 = .45	– 0.45
	Total Blockage	– 20.95
81-274 (e)	Available daylight squares	89.9
81-274 (f)	Remaining daylight	68.95
81-274 (g)	DAYLIGHT SCORE	
	68.95 / 89.9 = 76.70	76.70%

DAYLIGHT EVALUATION SCORE RESULTS

(81-274i)

81-275 - Special conditions

LAST AMENDED
5/13/1982

Notwithstanding the provisions of Sections 81-271 to 81-274, inclusive, relating to Alternate Height and Setback Regulations-Daylight Evaluation, the provisions of this Section shall apply under special conditions, as follows:

(a) For #zoning lots# with #street# frontages exceeding 250 feet

(1) Where the length of the #street# frontage is more than 250 feet but not more than 500 feet, the #building# as viewed from each #vantage point# shall be plotted on a #daylight evaluation chart# that extends in both directions from the 90 degree line on the horizontal axis. In each case, the number of available daylight squares for daylight evaluation shall be the number of squares between the #far lot line# and the #near lot line#.

(2) Where the length of the #street# frontage is more than 500 feet, daylight evaluations shall be made from three #vantage points#, as follows: #vantage points# one and two, each 250 feet distant from a #far lot line# extended to the #center line of the street#, and #vantage point# three, on the #center line of the street#, half-way between the other two #vantage points#. The #daylight evaluation charts# for the first two #vantage points# shall in each case encompass a view extending from the #far lot line# to the 90 degree line on the horizontal axis and the number of available daylight squares shall be the number of squares between the #far lot line# and the 90 degree line and above the curved line representing an elevation angle of 70 degrees. The #daylight evaluation chart# for the third #vantage point# shall extend in both directions from the 90 degree line on the horizontal axis to the vertical lines representing the points on the #front lot line# directly opposite #vantage points# one and two. The number of available daylight squares for daylight evaluation shall be the number of daylight squares between such vertical lines and above the curved line representing an elevation angle of 70 degrees.

(b) For #zoning lots# with interrupted #street# frontages

Where a #zoning lot# has two or more #front lot lines# on the same #street# which are separated by frontage of an intervening #zoning lot#, there shall be two daylight evaluations for each such #front lot line#. Each #lot line# of the #zoning lot# that intersects the #street line# shall be treated as a #far lot line# for the purposes of daylight evaluation from a #vantage point#.

(c) Where #front lot lines# are curved or broken

If the #front lot line# of the #zoning lot# is curved or bent, the extremities of such #front lot line# shall be connected by a straight line, which shall be considered the #front lot line#.

81-276 - Modification of score for reflectivity

LAST AMENDED
2/2/2011

Where #zoning lots# have utilized the #daylight evaluation chart# but a street score along one frontage is less than 66 percent or the overall score is less than 75 percent, a modest improvement in either the street score or the overall score of a #zoning lot# within a #building# which reflects more light than a medium gray or glass #building# may be obtained by scoring the relative reflectivity of the #building's# surface.

The use of reflectivity is optional and not necessary if a passing score can be obtained under Section 81-274 (Rules for determining the daylight evaluation score). Reflectivity scoring permits greater design flexibility for a light-colored #building# than a dark one.

Because the greatest reflectivity comes from the upper portions of #buildings#, the value of reflected light is credited against the amount of daylight blocked by the portions of the #building# above an elevation angle of 70 degrees from the #center line of the street#.

Reflectivity has two components: the reflectance of the surface material and the orientation of the material to the sun.

(a) Reflectance

Reflectance values of materials will be determined by the Department of Buildings after the submission of samples of proposed surface materials by the applicant.

(1) Mixed reflectance

A #building# of several surface materials will have a reflectance value determined by multiplying each material's reflectance value by its percentage of the total wall surface and adding the products. For example, a #building# that is 60 percent limestone and 40 percent clear glass would have a reflectance of .60 x .45 (the reflectance of limestone) plus .40 x .15 (the reflectance of clear glass) or an overall reflectance of .33.

(2) Relative reflectance

In order to be included in the reflectivity score of a #zoning lot#, the material of the #building# must reflect more light than a medium gray or glass #building#. The reflectance value of a medium gray or glass #building# in Midtown is .15 so that the #building# with an overall reflectance of .33, given in the example in paragraph (a)(1) of this Section, would be increasing the expected reflectance by .33 minus .15 which equals .18.

Examples of potential reflectance values for different types of surface finishes are shown on the following chart.

REFLECTANCE VALUES - EXAMPLES OF BUILDING MATERIALS

White plaster or paint or glaze	.80 to .90

Aluminum paint	.55
Green paint	.50
Red paint	.26
Light gray paint	.25
Flat black paint	.06
Polished aluminum, stainless steel	.85
Polished light marble	.40 to .50
Light granite, limestone	.45
Copper, brass lead	.60 to .80
Smooth concrete	.45+
Rough concrete	.40
Asbestos cement	.31
Light buff brick	.48
Dark buff brick	.40
Light red brick	.45
Dark red glazed brick	.30
Dark red brick	.12
Slate	.11
Wood	.22+
Glass: double glazing with reflective coating*	
Solarcool(r) bronze or gray	.35 to .36

Solarban(r) clear	.36 to .44
Solarban(r) bronze	.18
Solarban(r) gray	.14
Glass: tinted double glazing	
Gray	.08
Bronze	.09
Solex(r) (green or blue)	.12
Glass: clear double glazing	.15
Glass: clear single glazing	.08

_____

* Reflectance varies according to which layer the reflective coating is placed on, but can be precisely determined for each position

Sources:

Anderson, Bruce. Solar Energy: Fundamentals in Building Design. (McGraw Hill, New York 1977).

Callendar, John Hancock. Time Saver Standards: A Handbook of Architectural Design. (McGraw Hill, New York, 4th Edition, 1964).

PPG Industries, Inc., Architectural Glass Products (G702). PPG, Pittsburgh, PA., 1977.

(b) Facade orientation

Orientation of the facade of the #building# is the second component required for measurement of reflectivity. Because reflectivity varies according to the orientation of the facade, the orientation value for a particular surface from the chart below is multiplied by the reflectance of the surface to ascertain the amount of daylight reflectivity.

The orientation values are shown on the following reflectivity chart. Orientation angles shall be rounded to the nearest 22.5 degrees.

Orientation based on True North		Orientation Value
North:	0°	.09

	22.5°	.15
	45.0°	.22
	67.5°	.40
East:	90.0°	.57
	112.5°	.72
	135.0°	.87
	157.5°	.93
South:	180.0°	1.00
	157.5°	.93
	135.0°	.87
	112.5°	.72
West:	90.0°	.57
	67.5°	.40
	45.0°	.22
	22.5°	.15

(c) Reflectivity Score

In order to obtain the reflectivity score for each view of the #building#, first count the daylight squares and subsquares which are blocked by the #building# on the #daylight evaluation chart# above an elevation angle of 70 degrees. This number shall be calculated separately for every orientation of each facade and multiplied by the relative reflectance of that portion of the #building# and the orientation value.

Reflectance = (% material A x reflectance material A) + (% material B x reflectance material B)

Relative reflectance (RR) = reflectance minus .15

Reflectivity score = RR x facade orientation value x daylight squares blocked above 70°.

The reflectivity scores for the several orientations are then added together to give the reflectivity score for that view of the #building# as a whole from the #vantage point# represented on the #daylight evaluation chart#.

The reflectivity score is added to the daylight remaining after accounting for daylight blockage as calculated in paragraph (f) of Section 81-274

The sum is then calculated as a percentage of the available daylight squares calculated in paragraph (e) of Section 81-274 to give the adjusted daylight score for the #zoning lot# from the #vantage point# represented on the #daylight evaluation chart#.

The adjusted street score along a particular #vantage street# is obtained by calculating the mean average of the adjusted daylight scores from all #vantage points# along the #vantage street#.

The adjusted overall score for the #zoning lot# is obtained by calculating the average of the adjusted street scores weighted by the lengths of their respective #vantage street# frontages.

(d) Limits on adjusted scores

(1) Adjusted street score

The adjusted street score shall not be more than six percentage points higher than the street score not adjusted for reflectivity.

If reflectivity scoring is used to bring the adjusted overall score for the #zoning lot# above 75 percent (the passing overall score), the street score for each #street# frontage without adjustment for reflectivity shall be not less than 66 percent.

(2) Adjusted overall score

The adjusted overall score shall not be more than six percentage points higher than the overall score not adjusted for reflectivity.

If the reflectivity scores for any single #street# frontage are used to bring the adjusted street score for that frontage above 66 percent (the passing score for a single #street# frontage), the overall score of the #zoning lot# without adjustment for reflectivity shall be not less than 75 percent.

81-277 - Special permit for height and setback modifications

LAST AMENDED
11/25/1997

In C5-3, C6-6 or C6-7 Districts, where a special permit application is made pursuant to Section 74-71 (Landmark Preservation) for modification of #bulk# regulations on a #zoning lot# containing a landmark, or where a special permit application is made pursuant to Section 74-79 (Transfer of Development Rights From Landmark Sites) and the #floor area# represented by such transferred development rights exceeds 20 percent of the basic maximum #floor area# permitted on the #zoning lot# receiving the development rights, such application may include a request for modification of the height and setback regulations set forth in Sections 81-261 to 81-275, inclusive, relating to Alternate Height and Setback Regulations - Daylight Evaluation. The City Planning Commission may authorize such height and setback modifications subject to the following conditions:

(a) The applicant shall demonstrate to the satisfaction of the Commission that a feasible design for the proposed #development# or #enlargement# which accommodates the permitted #floor area# is not possible under the provisions of Sections 81-271 to 81-276, inclusive, and shall further present for the proposed design a complete daylight evaluation with an explanation of street score or overall daylight score deficiencies.

(b) The Commission shall make the following findings in addition to any required under the applicable provisions of Sections 74-71 or 74-79:

(1) that the requested departure from the alternate height and setback regulations is the minimum amount necessary to achieve a feasible #building# design;

(2) that the disadvantages to the surrounding area resulting from reduced light and air access will be more than offset by the advantages of the landmark's preservation to the local community and the City as a whole; and

(3) that where the landmark is located on the #zoning lot# proposed for #development# or #enlargement# or on a lot contiguous thereto or directly across a #street# therefrom, the modification of the alternate height and setback regulations will adequately protect the setting for the landmark.

81-28 - Minimum Distance Between Buildings

LAST AMENDED
2/2/2011

On any single #zoning lot# within the #Special Midtown District#, if two or more #buildings# or portions of #buildings# are detached from one another at any level, such #buildings# or portions of #buildings# shall at no point be less than eight feet apart.

81-30 - OFF-STREET PARKING AND OFF-STREET LOADING REGULATIONS

LAST AMENDED
5/13/1982

81-31 - General Provisions

LAST AMENDED
5/8/2013

The regulations of Article I, Chapter 3 (Comprehensive Off-street Parking and Loading Regulations in the Manhattan Core), and the applicable underlying district regulations of Article III, Chapter 6, or Article IV, Chapter 4, relating to Off-street Loading Regulations, shall apply throughout the #Special Midtown District#, except as otherwise provided in this Section.

81-311 - Prohibitions of off-street parking or off-street loading facilities

LAST AMENDED
5/8/2013

Notwithstanding the provisions of Article I, Chapter 3, prohibitions of off-street parking facilities or #accessory# off-street loading berths or restrictions as to their location or access, as provided in Sections 81-44 (Curb Cut Restrictions) or 81-84 (Mandatory Regulations and Prohibitions), may be waived only in accordance with the applicable provisions of Sections 81-44 or 81-84.

81-40 - MANDATORY DISTRICT PLAN ELEMENTS

LAST AMENDED
8/9/2017

81-41 - General Provisions

LAST AMENDED
8/9/2017

The provisions of Section 81-40 (MANDATORY DISTRICT PLAN ELEMENTS) specify mandatory planning and urban design features. Requirements which apply generally or with minor specified exceptions throughout the #Special Midtown District# are fully set forth in the provisions of Section 81-40. For requirements which are not generally applicable but tied to specific locations within the

District, the locations where these requirements apply are shown on Map 3 (Retail and Street Wall Continuity) or Map 4 (Subway Station and Rail Mass Transit Facility Improvement Areas) in Appendix A of this Chapter.

The provisions of Section 81-40 are all primarily oriented toward the accommodation and well-being of pedestrians. The requirements pertain to a number of elements which are interrelated and complement one another but are set forth in different sections because they can be treated separately. Sections 81-42 (Retail Continuity Along Designated Streets), 81-43 (Street Wall Continuity Along Designated Streets) and 81-44 (Curb Cut Restrictions) are a group of sections with closely related purposes concerned with amenity and the well-being and safety of pedestrians. Sections 81-45 to 81-48, inclusive, are all concerned primarily with pedestrian traffic circulation. Major #building# entrances are focal points of heavy pedestrian traffic, so that controls on the locations of these entrances, as set forth in Section 81-48, are closely related to the pedestrian circulation space requirements.

Special district plan requirements for the Penn Center Subdistrict are set forth in Section 81-50, for the East Midtown Subdistrict are set forth in Section 81-60, for the Theater Subdistrict are set forth in Section 81-70, for the Fifth Avenue Subdistrict are set forth in Section 81-80 and for the Preservation Subdistrict are set forth in Section 81-90.

81-411 - Maintenance of pedestrian circulation spaces

LAST AMENDED
2/2/2011

Owners of property on which pedestrian circulation spaces are provided shall be responsible for their maintenance unless, in the case of relocated subway stairs, the Metropolitan Transit Authority has agreed in writing to such maintenance responsibility.

81-412 - Directional signs

LAST AMENDED
5/13/1982

Directional #signs# are required to call attention to relocated subway stairs and through #block# connections and announce their accessibility to the public.

81-413 - Provisions for persons with disabilities

LAST AMENDED
10/17/2007

All mandatory district plan elements required by the provisions of Section 81-45 (Pedestrian Circulation Space) shall conform with applicable laws pertaining to access for persons with disabilities.

81-42 - Retail Continuity Along Designated Streets

LAST AMENDED
10/7/2021

For #buildings# #developed# or #enlarged# after May 13, 1982, where the ground floor level of such #development# or #enlarged# portion of the #building# fronts upon a designated retail #street# (see Appendix A, Map 3), #uses# within #stories# on the ground floor or with a floor level within five feet of #curb level# shall be limited to retail, personal service or amusement #uses# permitted by the underlying zoning district regulations but not including #uses# in Use Groups 6B, 6E, 7C, 7D, 8C, 8D, 9B, 10B, 11 and 12D or automobile showrooms or plumbing, heating or ventilating equipment showrooms. Museums and libraries shall be permitted. A #building's# #street# frontage shall be allocated exclusively to such #uses#, except for:

(a) lobby space or entrance space;

(b) entrance areas to subway station improvements for which bonus #floor area# is granted and #street wall# continuity restrictions

waived pursuant to Section 66-51 (Additional Floor Area for Mass Transit Station Improvements);

(c) one or more of the following pedestrian circulation spaces subject to the #street wall# continuity requirements of Section 81-43 (Street Wall Continuity Along Designated Streets):

(1) relocated subway stairs provided in accordance with Sections 37-40 and 81-46 (Off-street Relocation or Renovation of a Subway Stair);

(2) through #block# connections provided in accordance with paragraph (h) of Section 37-53 (Design Standards for Pedestrian Circulation Spaces); and

(3) off-street improvements of access to rail mass transit facilities provided in accordance with Section 81-48 (Off-street Improvement of Access to Rail Mass Transit Facility).

Except as provided in the following sentence, in no event shall the length of #street# frontage occupied by lobby space, entrance space and/or a #building# entrance recess exceed the lesser of 40 feet or 25 percent of the #building's# total #street# frontage exclusive of any frontage occupied by a relocated subway stair, a through #block# connection, an off-street improvement of access to rail mass transit facility or the entrance area to a bonused subway station improvement. However, the total length of #street# frontage occupied by lobby space and/or entrance space need not be less than 20 feet.

Storefronts for the permitted ground floor #uses# shall be not more than 10 feet from the #street line# or, where an arcade is provided with supporting columns at the #street line#, not more than 10 feet from the supporting columns.

Access to each retail, personal service or amusement establishment required under this Section shall be provided directly from the designated retail #street#. Where more than one entrance is provided to the establishment, direct access from the designated retail #street# shall be provided via the entrance with the greatest aggregate clear opening width. At least 50 percent of the #street wall# surface of each required establishment shall be glazed with clear untinted transparent material and not more than 50 percent of such transparent surface shall be painted or obstructed with #signs#. For the purpose of this glazing requirement, the establishment's #street wall# surface shall be measured from the floor to the height of the ceiling or 14 feet above grade, whichever is less.

Special #use# regulations apply along designated retail #streets# located within the boundaries of the Penn Center Subdistrict, the East Midtown Subdistrict, the Theater Subdistrict or the Fifth Avenue Subdistrict and #uses# along such designated #streets# shall be subject to the respective subdistrict retail requirements in Sections 81-531, 81-674, 81-72 and 81-82.

Special ground level and entertainment-related #use# regulations apply to #zoning lots# located within the Theater Subdistrict Core, as defined in Section 81-71 (General Provisions), and such #zoning lots# shall meet the ground level and entertainment-related #use# requirements of Section 81-72 (Use Regulations Modified).

81-43 - Street Wall Continuity Along Designated Streets

LAST AMENDED
10/7/2021

On designated #streets# where #street wall# continuity is required (see Map 2 in Appendix A) and, between 43rd and 50th Streets, on the #narrow street# frontages of #zoning lots# with #street# frontage on Seventh Avenue and/or Broadway, the #street wall# of a #building#, for the minimum width and height set forth in this Section, shall be within 10 feet of the #street line# or within 10 feet of a permitted arcade's supporting columns at the #street line#, except that on 57th Street, 42nd Street, 34th Street and Fifth Avenue, no #street wall# setback below a height of 85 feet is permitted. The width of the #street wall# subject to setback restrictions shall be at least 80 percent of the length of the #front lot line# of the #zoning lot# along the specified #street#, measured at the specific heights or anywhere above the specific heights indicated in the table in this Section. At those specific heights or anywhere above those specific heights, the #street wall# must extend continuously within 10 feet of the #street line# for all of its required width, except that on 57th Street, 42nd Street, 34th Street and Fifth Avenue, at a height of 85 feet or above, the #street wall# must extend continuously without setback for at least 75 percent of its required width and no portion of its required width shall be set back more than 10 feet from the #street line#; and, for #zoning lots# between 43rd and 50th Streets with #street# frontage on Seventh Avenue and/or Broadway, any portion of the required width of a #street wall# which lies behind a #sign# required under the provisions of Section 81-732 (Special Times Square signage requirements) may be set

back up to 15 feet from the #street line#.

The minimum height of a #street wall# subject to the setback restrictions shall be as follows:

Length of #Zoning Lot# Frontage	Minimum Height of a #Street Wall# Subject to the Setback Restrictions
For #zoning lots# with frontages of 50 feet or less on the designated #street#	Four #stories# or 50 feet above #curb level#, whichever is less
For #zoning lots# with frontages of more than 50 feet on the designated #street#	Six #stories# or 85 feet above #curb level#, whichever is less

#Developments#, which are in their entirety no more than two #stories# in height, shall be exempt from the minimum #street wall# height requirements set forth in the table in this Section, except that, subsequent to the issuance of a building permit for such #development#, if there are additional #developments# on the #zoning lot# or if any #building# on the #zoning lot# is #enlarged#, the #development# exempt from the requirements set forth in the table in this Section, shall no longer be exempt from such requirements and its #street walls# shall be raised to a height complying with the table.

Existing #buildings# need not comply with the minimum #street wall# height and location provisions of this Section. Such #buildings# shall be included in the calculation of the required percentage of #street wall# width and height along a #street# frontage. No existing #building# shall be altered such that a #non-compliance# with the provisions of this Section is created, nor shall an existing degree of #non-compliance# with these provisions be increased.

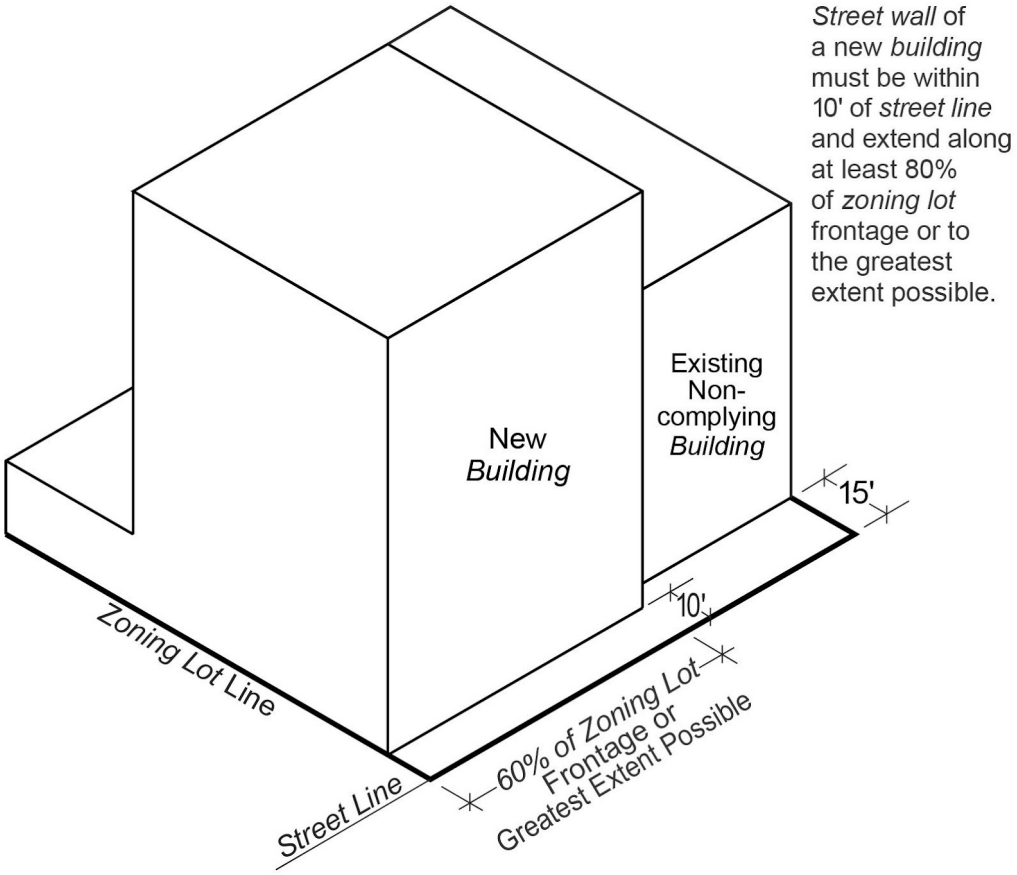

STREET WALL REQUIREMENT WITH EXISTING BUILDING

(81-43)

Pedestrian circulation spaces may be provided to meet the requirements of Sections 81-45 (Pedestrian Circulation Space), 81-46 (Off-street Relocation or Renovation of a Subway Stair) or 81-48 (Off-street Improvement of Access to Rail Mass Transit Facility), subject to the setback restrictions of this Section and to the minimum width of the #street wall# subject to such setback restrictions. However, the City Planning Commission may waive such restrictions for a subway entrance area which is part of a subway station or a rail mass transit facility improvement for which bonus #floor area# is granted, in accordance with the provisions of Sections 66-51 (Additional Floor Area for Mass Transit Station Improvements) and 81-542 (Retention of floor area bonus for plazas or other public spaces), or an off-street improvement of access to a rail mass transit facility that has been certified in accordance with Section 81-48.

Except on 57th Street, 42nd Street, 34th Street and Fifth Avenue, below the minimum height of a #street wall# subject to the setback restriction, recesses (whose depth shall be measured in all cases from the #street line#) shall be permitted only as follows: no recesses greater than 15 feet deep shall be permitted, recesses up to 15 feet deep shall be limited in their aggregate area to no more than 30 percent of the area of the new #street wall# below the minimum required #street wall# height; in addition, recesses up to 12 feet deep shall be limited in their aggregate area to no more than 20 percent of the area of the #street wall# below the minimum required #street wall# height, and recesses up to 10 feet deep shall not be limited in their aggregate area.

On 57th Street, 42nd Street, 34th Street and Fifth Avenue, below the minimum height of a #street wall# subject to the setback restriction, recesses (whose depth shall be measured in all cases from the #street line#) shall be permitted only as follows: no recesses greater than 10 feet deep shall be permitted; recesses up to 10 feet deep shall be limited in their aggregate area to no more than 30 percent of the area of the #street wall# below the minimum required #street wall# height; in addition, recesses up to two feet deep shall be limited in their aggregate area to no more than 20 percent of the area of the #street wall# below the minimum required #street wall# height and recesses up to one foot deep shall not be limited in their aggregate area.

The restrictions on recesses shall not apply to arcades, corner arcades, subway stairs relocated within the #building#, through #block# connections within the #building# or #building# entrance recess areas within the #building#, where such spaces are provided in accordance with the requirements and design standards of Sections 81-45 or 81-46 and provided that such spaces shall be subject to a maximum height limit of 30 feet. Any recesses in the #residential# portion of a #building# shall comply with the #outer court# regulations of Section 23-84.

No arcades, sidewalk widenings or #public plazas# shall be permitted on Fifth Avenue, 34th Street, 42nd Street or 57th Street frontages. Between 42nd and 56th Streets, no arcades or #public plazas# shall be permitted on Eighth Avenue. Between 43rd and 50th Streets, no arcades or #public plazas# shall be permitted on Seventh Avenue or Broadway and, with the exception of marquees and #signs#, any area between the Seventh Avenue or Broadway #street line# and any required #street wall# below the height of the first required setback, including permitted recesses, shall be open from #curb level# to the sky in its entirety. Any such area shall be at the same elevation as the adjoining sidewalk, directly accessible to the public at all times and free of all obstructions at ground level, including #street# trees. On the remaining #streets# designated for #street wall# continuity, arcades, if provided, shall be not less than 10 feet in depth and not more than 30 feet high. Arcades shall not be counted toward the recess allowances.

For #zoning lots# between 43rd and 50th Streets with #street# frontage on Seventh Avenue and/or Broadway, the minimum and maximum heights of #street walls# subject to the setback restrictions on all #street# frontages shall be in accordance with Section 81-75 (Special Street Wall and Setback Requirements).

For #zoning lots# located wholly or partially within the Eighth Avenue Corridor, the minimum and maximum heights of #street walls# subject to the setback restrictions on all #street# frontages shall be in accordance with Section 81-75.

On Fifth Avenue, the minimum required #street wall# height without setback shall be 85 feet and the maximum allowable #street wall# height without setback shall be 125 feet. Above the maximum #street wall# height, a setback of at least 10 feet shall be required, pursuant to the provisions of Section 81-83.

81-44 - Curb Cut Restrictions

LAST AMENDED
5/8/2013

Along all avenues in Midtown and along 57th, 53rd, 42nd and 34th Streets, no driveway curb cuts for parking facilities or loading berths shall be permitted except for the following:

(a) the Commissioner of Buildings may approve a curb cut where there are no alternative means of access to off-street loading berths from other #streets# bounding the #zoning lot#; or

(b) the City Planning Commission may authorize curb cuts where such curb cuts are needed for required loading berths. Such loading berths must be adjacent to a fully enclosed maneuvering area on the #zoning lot# at least equal in area to the area of the required loading berth and arranged so as to permit head-in and head-out truck movements to and from the #zoning lot#. The City Planning Commission will refer such applications to the Department of Transportation for their comment.

In addition, for #zoning lots# with frontage along such avenues and #streets# in Midtown where curb cuts are prohibited, the Commissioner of Buildings may waive required off-street loading berths pursuant to the provisions set forth in Section 13-35 (Modification of Loading Berth Requirements).

Where a curb cut is permitted as indicated in this Section, the maximum width of such curb cut shall be 15 feet for one-way traffic and 25 feet for two-way traffic. These curb cut requirements shall be in addition to any other applicable City rules or regulations concerning driveway curb cuts.

The above exceptions do not apply to Fifth Avenue, or between 43rd and 50th Streets, to Seventh Avenue or Broadway and no curb cuts shall be permitted in these cases. Between 43rd and 50th Streets, access to #accessory# off-street loading berths or off-street parking facilities shall not be permitted on Seventh Avenue or Broadway or, except where the length of a #narrow street# #block# frontage between the #street lines# of Seventh Avenue and Broadway exceeds 75 feet but is less than 125 feet, within 50 feet of the Seventh Avenue or Broadway #street line#. #Interior lots# between 43rd and 50th Streets with a #street# frontage only on Seventh Avenue or Broadway shall not contain loading berths.

81-45 - Pedestrian Circulation Space

LAST AMENDED
2/2/2011

Within the #Special Midtown District#, all #developments# or #enlargements# constructed after May 13, 1982, on #zoning lots# of 5,000 square feet or larger with more than 70,000 square feet of new #floor area#, shall provide pedestrian circulation space on such #zoning lot# in accordance with the provisions of Section 37-50, as modified by the provisions of this Section.

The requirements for pedestrian circulation space may be met by providing one or more of the following types of spaces: arcade, #building# entrance recess area, corner arcade, corner circulation space, relocation or renovation of a subway stair, sidewalk widening, subway station improvement, through #block# connection or #public plaza#.

In addition to the types of pedestrian circulation spaces listed in Section 37-50, the following may be counted toward meeting the minimum pedestrian circulation space requirement:

(a) up to a maximum of 3,000 square feet of an access improvement to rail mass transit provided pursuant to Section 81-48 (Off-Street Improvement of Access to Rail Mass Transit Facility);

(b) within the Theater Subdistrict, theater waiting space provided pursuant to Section 81-451 (Theater waiting space).

However, pedestrian circulation space shall not be required if any of the following conditions exist:

(1) the #zoning lot# is entirely occupied by a #building# of no more than one #story# in height;

(2) the #zoning lot# is an #interior lot# fronting on a #wide street# with less than 80 feet of #street# frontage;

(3) the #zoning lot# is an #interior lot# or #through lot# fronting only on a #street# or #streets# where arcades, sidewalk widenings or #public plazas# are prohibited;

(4) the #zoning lot# is an #interior lot# fronting on either 34th Street, 42nd Street, 57th Street or Fifth Avenue, with another interior

frontage of lesser length on any other #street#; or

(5) the #zoning lot# is a #through lot# with both #street# frontages less than 25 feet in length.

#Developments# or #enlargements# on a #zoning lot# having a full #block# frontage on a #wide street# other than Fifth Avenue, 34th Street, 42nd Street or 57th Street shall provide a minimum of 50 percent of their required pedestrian circulation space on that #street#. In the case of a #zoning lot# having two full #block# frontages on #wide streets#, this minimum amount may be allocated on either one or both #wide streets#; where each #street# bounding a #zoning lot# with at least one full #block# frontage is a #wide street#, the minimum amount may be allowed on one or more of those #wide streets#.

Where pedestrian circulation space is provided along Seventh Avenue or Broadway between 43rd and 50th Streets, #signs# and marquees shall be permitted as exceptions to the requirements relating to permitted obstructions in Section 37-50.

Special dimensional requirements for arcades and sidewalk widenings along designated #streets# are set forth in Section 37-53 (Design Standards for Pedestrian Circulation Spaces). Where a new #building# or #enlarged# portion of an existing #building# provides an arcade, no obstructions, including columns, shall be permitted within such arcade, and the maximum height of such arcade shall be 20 feet and the maximum width shall be 10 feet. Arcades or sidewalk widenings shall not be permitted on 34th Street, 42nd Street, 57th Street or Fifth Avenue frontages or on any #street# frontage within the Preservation Subdistrict. Between 43rd and 50th Streets, no arcades shall be permitted parallel to and along Seventh Avenue or Broadway.

81-451 - Theater waiting space

LAST AMENDED
8/6/1998

Theater waiting space shall be an unobstructed area providing outdoor waiting space for a theater audience, located immediately adjacent to the sidewalk and to a theater listed in Section 81-742 (Listed theaters) or a new theater designed and intended to show live theatrical performances. Theater waiting space may be located on the same #zoning lot# occupied by a theater or a #zoning lot# immediately adjacent to a theater, and shall meet the following requirements:

(a) such space shall adjoin and open onto a sidewalk or sidewalk widening for its entire length and shall have a minimum length of 30 feet measured parallel to the #street line# and a minimum clear depth of 10 feet measured perpendicular to the #street line# exclusive of any columns. Its level shall be entirely the same as that of the adjoining sidewalk. When located under an overhanging portion of a #building or other structure#, it shall have a minimum clear height of 15 feet and be free of any obstructions except for #building# columns;

(b) such space shall provide direct access to a #building's# entrance or the theater's lobby. Where the theater and the theater waiting space are on separate #zoning lots#, a plaque shall be provided within the theater waiting space adjacent to the theater stating that the space is available as a waiting area for the theater audience. Such plaque shall be placed between four feet and six feet above #curb level#, and shall be visible from the sidewalk;

(c) such space shall not adjoin a driveway or an off-street loading berth; and

(d) the entire theater waiting space shall be illuminated with a minimum level of not less than eight horizontal foot-candles (lumens per foot).

The theater waiting space may overlap with an arcade, a #building# entrance recess area, a corner arcade, a corner circulation space or a sidewalk widening. However, the area of overlap may only be counted once toward the fulfillment of the required minimum area of pedestrian circulation space.

81-46 - Off-street Relocation or Renovation of a Subway Stair

LAST AMENDED
2/2/2011

Where a #development# or #enlargement# is constructed on a #zoning lot# that contains at least 5,000 square feet of #lot area# and fronts on a sidewalk containing a stairway entrance or entrances into a subway station, the existing entrance or entrances shall be relocated from the #street# onto the #zoning lot#. The new entrance or entrances shall be provided in accordance with the provisions of Section 37-40 (OFF-STREET RELOCATION OR RENOVATION OF A SUBWAY STAIR). A relocated or renovated subway stair may be counted as pedestrian circulation space in accordance with the provisions of Section 37-50.

The subway stations where such improvements are required are listed in the following table and shown on Map 3 (Subway Station and Rail Mass Transit Facility Improvement Areas) in Appendix A.

Station	Line
34th Street-Penn Station	Broadway-7th Avenue
34th Street-Penn Station	8th Avenue
34th Street-Herald Square	6th Avenue/Broadway-60th Street
42nd Street-Times Square/42nd Street- Port Authority Bus Terminal	Broadway-7th Ave/Broadway/ 8th Ave/42nd St. Shuttle
42nd Street-Bryant Park/Fifth Avenue	6th Avenue/Flushing
42nd Street-Grand Central	Lexington Avenue/Flushing/ 42nd St. Shuttle
47th-50th Street-Rockefeller Center	6th Avenue
49th Street	Broadway-60th Street
50th Street	8th Avenue
50th Street	Broadway-7th Avenue
7th Avenue	53rd Street
Fifth Avenue-53rd Street	53rd Street
51st Street/Lexington Ave.- 53rd Street	53rd Street/Lexington Avenue
57th Street	Broadway-60th Street
57th Street	6th Avenue

59th Street-Columbus Circle	Broadway-7th Avenue/8th Avenue

81-47 - Major Building Entrances

LAST AMENDED
2/2/2011

In order to limit pedestrian traffic congestion on #zoning lots# with at least 20,000 square feet of #lot area#, the following restrictions apply to #buildings# #developed# after May 13, 1982, as described in paragraphs (a) and (b) of this Section, except as provided in paragraph (c) in this Section. For the purposes of this Section, the major entrance to a #building# shall be that entrance to the main lobby of the #building# which has the greatest aggregate width of clear openings for access.

(a) When the #zoning lot# contains a #public plaza# or an open though #block# connection located entirely outside of the #building#, the major entrance to the #building# shall open on the #public plaza# or the open through #block# connection.

(b) Where there is no #public plaza# or open through #block# connection on the #zoning lot#, the following restrictions on major entrances shall apply to #corner lots# or #block# front lots:

(1) #Corner lots#

On a #corner lot# with frontage on no more than one #narrow street#, the major entrance shall be located on the #narrow street#.

On a #corner lot# with frontages on two #wide streets#, the major entrance shall be located on either #wide street#.

(2) #Block# front lots

On a full #block# front lot with one or more #narrow street# frontages, a major entrance shall be located on at least one #narrow street#, except that this requirement shall not apply if the #zoning lot# contains a permitted sidewalk widening with a width of 10 feet along a #wide street#.

(c) Exceptions to requirements

Under the following conditions, #developments# shall not be subject to the locational requirements of this Section:

(1) where the location of an existing #building# on the #zoning lot# precludes compliance with the regulations of this Section; or

(2) where the #zoning lot# is located on a #block# where the distance between two intersections of #street lines# is less than 150 feet.

81-48 - Off-street Improvement of Access to Rail Mass Transit Facility

LAST AMENDED
2/2/2011

An off-street rail mass transit access improvement shall provide a new point of unobstructed off-street public access to a rail mass transit station or facility. It shall immediately adjoin, and be accessible without any obstruction from, an arcade, a #building# entrance recess area, a corner arcade, a corner circulation space, a public sidewalk, a sidewalk widening or a #public plaza#, each of which shall have a minimum horizontal dimension equal to the width of the rail mass transit access improvement. The rail mass transit access improvement may be provided within a #building# but shall not be enclosed by any doors. The area it occupies within a #building# shall not be counted toward the #floor area# of the #zoning lot#.

The Chairperson of the City Planning Commission may certify that an off-street rail mass transit access improvement satisfies the requirements of Section 81-45 (Pedestrian Circulation Space), provided that such improvement is approved by the entity which operates the mass transit station or facility and meets the following standards:

(a) Dimensions

An off-street mass transit access improvement shall have a minimum clear, unobstructed width of not less than 15 feet and a minimum clear, unobstructed height from finished floor to finished ceiling of not less than eight feet.

(b) Obstructions

An off-street mass transit access improvement shall be free of obstructions except for #building# columns and shall provide a continuous, unobstructed path at least 15 feet wide connecting the public sidewalk, pedestrian circulation space or #public plaza# with the rail mass transit station or facility.

(c) Hours of public accessibility

An off-street rail mass transit access improvement shall be accessible to the public during the hours when the circulation areas to which it connects are open to the public or during such hours as are otherwise approved by both the Chairperson and the operating entity of the mass transit station or facility.

(d) Enclosures

The rail mass transit access improvement may be provided within a #building# but shall not be enclosed by any doors unless the Chairperson certifies that such improvement is an integral part of the #building# lobby and public circulation space, and such doors are secured only during the hours that the circulation areas of the rail mass transit facility to which it connects are closed.

(e) Maintenance

An off-street rail mass transit access improvement shall be maintained by the owner of the #development# or #enlargement#.

One and a half times the area of the new off-street rail mass transit access improvement measured at #street# level shall, upon the Chairperson's certification, count toward the minimum area of pedestrian circulation space required under the provisions of Section 81-45, up to a maximum of 3,000 square feet.

81-50 - SPECIAL REGULATIONS FOR THE PENN CENTER SUBDISTRICT

LAST AMENDED
10/31/2001

81-51 - General Provisions

LAST AMENDED
8/26/2010

In order to establish the Penn Center Subdistrict as a destination and enhance its retail, entertainment and commercial character and expand accessibility to its transportation network, special regulations are set forth governing the location and type of #signs#, urban design and streetscape relationships, and the improvement of pedestrian circulation to and from public transit facilities.

The regulations of Section 81-50 are applicable only in the Penn Center Subdistrict, the boundaries of which are shown on Map 1 (Special Midtown District and Subdistricts) in Appendix A of this Chapter, except as set forth for rail mass transit facility improvements, pursuant to Section 81-541. These regulations supplement or modify the provisions of this Chapter applying generally to the #Special Midtown District#, of which this Subdistrict is a part.

81-52 - Sign Regulations

LAST AMENDED
10/31/2001

The provisions of this Section shall apply to all #zoning lots# with frontage along Seventh Avenue. The height of all #signs# shall be measured from the #curb level#.

(a) #Signs#, including #advertising signs#, #flashing signs# and #illuminated signs#, unlimited in area, shall be permitted to a height of 40 feet. Below a height of 14 feet, such #signs# shall not occupy more than 50 percent of the glazed #street wall# surface required, pursuant to Section 81-42, nor shall such #signs# be located within 10 feet of an entrance to a rail mass transit facility or subway station.

(b) #Signs#, including #advertising signs#, #flashing signs# and #illuminated signs#, except as otherwise provided in Section 81-52, paragraph (c), may be permitted above a height of 40 feet by the City Planning Commission, upon certification that:

(1) such #signs# and #sign# structures to which #signs# are attached shall not exceed a height of 60 feet; except that #signs# and #sign# structures onto which #signs# are attached, within 40 feet of the intersection of two #streets# or within 30 feet of the centerline of the westerly prolongation of West 32nd Street along the west #block# front of Seventh Avenue between West 31st and West 33rd Streets, shall not exceed a height of 100 feet;

(2) such #signs# above a height of 60 feet are located on #zoning lots# that contain an entrance to, or are adjacent to, an entrance to a rail mass transit facility and/or subway station;

(3) such #signs# shall not project across a #street line# more than 18 inches for double or multifaceted #signs# or 12 inches for other signs, except that #signs# within 40 feet of the intersection of two #streets# may project up to three feet across a #street line# above a height of 25 feet;

(4) such #signs# that exceed a height of 60 feet, shall be no wider than 40 feet each;

(5) such #signs# or #sign# structures that exceed a height of 60 feet, may include lighting effects at the top of such #sign# structure and such lighting effects shall not exceed a height of 10 feet above such #sign# or #sign# structure.

(6) such #signs# and #sign# structures onto which #signs# are attached within 30 feet of the centerline of the westerly prolongation of West 32nd Street shall have a minimum clearance of 10 feet from the adjacent #building#, and such #sign# structure shall have a minimum clearance of 20 feet from the #street line# in order not to obstruct visibility of the transit entrance from the #street#;

(7) on #zoning lots# that contain an entrance to, or are adjacent to, an entrance to a rail mass transit facility and/or subway station, the requirements for rail mass transit or subway entrance informational #signs# of Section 81-521 are met; and

(8) monies will be deposited into an escrow account or similar fund established by the City, to be used at the direction of the Chairperson of the City Planning Commission and the Commissioner of the Department of Transportation, acting in consultation with the Metropolitan Transit Authority, as necessary, for streetscape and for abovegrade and belowgrade pedestrian circulation improvements within the Penn Center Subdistrict. For the period through January 1, 2003, and thereafter, until adjusted by rule of the City Planning Commission pursuant to the City Administrative Procedure Act, such #sign# contribution shall be equal to $30 per square foot of #sign# permitted above a height of 40 feet. Any net increase in the surface area of a previously approved #sign# shall require a new certification and the deposit of a supplemental #sign# contribution in an amount reflective of such increase.

Alternatively, an applicant may, at the time of the first certification for a #sign# at a location under its control, deposit a #sign# contribution in an amount equal to $20 per square foot of #sign# above a height of 40 feet for the total amount of square footage of all #signs# eligible for certification at locations under the applicant's control. The deposit of monies under this alternative procedure shall not relieve the applicant of the requirement to seek and obtain a certification for each such #sign#, pursuant to this paragraph (b), prior to installation.

For purposes of this paragraph (b), the square footage of the #sign# shall mean the #surface area# of a #sign#, except that it shall also include the area of any structural frame or similar enclosure in which the #sign# is located or to which it is attached. No #sign# for which a certification has been received shall be installed prior to deposit of the #sign# contribution in accordance with this paragraph (b).

(c) #Signs# above a height of 40 feet on any #building# listed on the State and/or National Register of Historic Places, or any #building# formally determined eligible for inclusion on the Register, may be permitted upon authorization by the City Planning Commission, that:

(1) the proposed method of attachment of such #signs# shall be reversible;

(2) such #signs# shall not be disruptive to the historic fabric of the #building#;

(3) such #signs# shall comply with all other requirements of paragraph (b) of this Section;

(4) the requirements for rail mass transit or subway entrance informational #signs# of Section 81-521 are met; and

(5) monies shall be deposited into an escrow account or similar fund established by the City, to be used at the direction of the Chairperson of the City Planning Commission and the Commissioner of the Department of Transportation, acting in consultation with the Metropolitan Transit Authority, as necessary, for streetscape and for above-grade and belowgrade pedestrian circulation improvements within the Penn Center Subdistrict. For the period through January 1, 2003, and thereafter, until adjusted by rule of the City Planning Commission pursuant to the City Administrative Procedure Act, such #sign# contribution shall be equal to $30 per square foot of #sign# permitted above a height of 40 feet. For purposes of this paragraph (c), the square footage of the #sign# shall mean the #surface area# of a #sign#, except that it shall also include the area of any structural frame or similar enclosure in which the #sign# is located or to which it is attached. No #sign# for which an authorization has been approved shall be installed prior to deposit of the #sign# contribution in accordance with this paragraph (c), or the alternative #sign# contribution provided in paragraph (b)(8) of this Section.

Any net increase in the #surface area# of a previously approved #sign# shall require a new authorization and the deposit of a supplemental #sign# contribution in an amount reflective of such increase.

81-521 - Rail mass transit and subway entrance informational signs

LAST AMENDED
10/31/2001

For a #zoning lot# that contains or is adjacent to an entrance or entrances to a rail mass transit facility or subway station, no permit shall be issued for any #signs# that extend or are located above a height of 40 feet, unless the City Planning Commission certifies that each such entrance is clearly identified with rail mass transit or subway entrance informational #signs# and marquees in accordance with paragraphs (a) and (b) of this Section. Such rail mass transit or subway entrance informational #sign# or marquee shall remain, or be upgraded or replaced by a similar #sign# or marquee, for the life of the related development.

(a) Rail mass transit or subway entrance informational #signs# shall prominently identify the entrance on both #streets# of a #corner lot#. Where rail mass transit or subway entrance informational #signs# are provided at the western #block# front of Seventh Avenue between West 31st and West 33rd Streets, such #signs# shall prominently identify the entrance to Pennsylvania Station to pedestrians on both Seventh Avenue and West 32nd Street. All such informational #signs# shall comply with the following requirements:

(1) such #signs# shall contain only transit information;

(2) such #signs# shall be illuminated and located no less than 12 feet above and no more than 25 feet above #curb level#;

(3) such #signs# shall contain the word “Subway” and/or appropriate other rail mass transit identification and transit line symbols. The graphic standards shall adhere to New York City Transit or other pertinent transit agency standards with all

letters no less than three feet and transit symbols no less than two feet in dimension;

(4) such #signs# shall be no less than 30 feet in length on each #street# and shall extend farther than 30 feet in order to include the actual entrance; and

(5) such #signs# may project up to five feet beyond the #street line#.

(b) At the rail mass transit or subway entrance, a marquee shall be provided to further identify the entrance and shall:

(1) contain only transit sign information;

(2) be illuminated and located no less than 12 feet above and no more than 25 feet above #curb level#;

(3) have a minimum length of 20 feet or the full width of the entrance, whichever is less;

(4) project no less than five feet beyond the transit or subway informational #sign#; and

(5) include illuminated mass transit identification and transit line symbols that meet the New York City Transit or other pertinent transit agency standards.

81-53 - Special Bulk and Urban Design Requirements

LAST AMENDED
2/2/2011

In addition to the requirements set forth in Sections 81-25 (General Provisions Relating to Height and Setback of Buildings) and 81-40 (MANDATORY DISTRICT PLAN ELEMENTS), the provisions of this Section shall apply to a #zoning lot# having 50 percent or more of its #lot area# within the Penn Center Subdistrict. For the purposes of this Section, all such #zoning lots# shall be deemed to be entirely within the Subdistrict. If any of the provisions of Sections 81-25, 81-40 and 81-53 are in conflict, the regulations of this Section shall govern.

81-531 - Special retail frontage requirements

LAST AMENDED
10/31/2001

The provisions of Section 81-42 (Retail Continuity Along Designated Streets) shall apply within the Penn Center Subdistrict. However, the requirement that at least 50 percent of the #street wall# surface of each ground floor establishment be glazed with clear, untinted, transparent material, and not more that 50 percent of such transparent surface be painted or obstructed with #signs# shall not apply to any informational #signs# or marquees provided to identify rail mass transit or subway entrances in accordance with Section 81-52 (Sign Regulations).

81-532 - Special street wall requirements

LAST AMENDED
2/2/2011

The provisions of Section 81-43 (Street Wall Continuity Along Designated Streets) shall apply, except that the #street wall# of all #buildings# along the Seventh Avenue frontage of #zoning lots# shall be a minimum of 85 feet above #curb level# or the full height of the #building#, whichever is less. All other provisions of Section 81-43 shall apply without modification.

In addition, the restrictions on permitted recesses contained in Section 81-43 shall not apply to pedestrian circulation spaces provided in accordance with Sections 81-46 (Off-street Relocation or Renovation of a Subway Stair) or 81-48 (Off-street Improvement of Access to Rail Mass Transit Facility) nor to interstitial spaces between #signs# or between #building# walls and #signs#.

81-54 - Floor Area Bonus in the Penn Center Subdistrict

LAST AMENDED
10/31/2001

81-541 - Mass transit station improvements

LAST AMENDED
10/7/2021

For #developments# or #enlargements# on #qualifying transit improvement sites#, a #floor area# bonus for #mass transit station# improvements may be granted by the City Planning Commission pursuant to the provisions of Section 66-51 (Additional Floor Area for Mass Transit Station Improvements). For the purposes of this paragraph, defined terms additionally include those in Section 66-11 (Definitions).

For the purposes of this Section, improvements to any #mass transit station# on a #qualifying transit improvement site# located wholly or partially within the Subdistrict qualifies for bonus #floor area# in accordance with the provisions of Section 66-51, as modified herein. For a #qualifying transit improvement site# located partially within the Subdistrict, such bonus #floor area# may be located anywhere on such #qualifying transit improvement site#. In addition, if a #mass transit station# improvement has been constructed in accordance with an approved authorization or special permit and has received a Notice of Substantial Completion in accordance with the provisions of Section 66-51, the bonus #floor area# may be retained at the full amount granted by the authorization or special permit and may be utilized elsewhere on the #qualifying transit improvement site# subject to any applicable review and approval process for such #development# or #enlargement#.

81-542 - Retention of floor area bonus for plazas or other public spaces

LAST AMENDED10/17/2007

For the #zoning lot# bounded by West 34th Street, Seventh Avenue, West 33rd Street and Eighth Avenue, which contains at least 7,000 square feet of existing #publicly accessible open areas# or other bonused public amenity in the Penn Center Subdistrict, the maximum allowed #floor area# bonus for all existing #publicly accessible open areas# or other public amenities on the #zoning lot# may be retained at the amount allowed prior to October 31, 2001, subject to all other provisions of this Resolution, notwithstanding inclusion of such #zoning lot# within the #Special Midtown District#.

81-60 - SPECIAL REGULATIONS FOR THE EAST MIDTOWN SUBDISTRICT

LAST AMENDED
8/9/2017

81-61 - General Provisions

LAST AMENDED
8/9/2017

Special regulations are set forth in this Section to protect and strengthen the economic vitality and competitiveness of East Midtown by facilitating the development of exceptional modern and sustainable office towers; creating successful pedestrian-friendly public spaces; enabling improvements to the above- and below-grade pedestrian circulation network; protecting and strengthening the role of landmark buildings as important features of East Midtown; protecting and enhancing the role of Grand Central Terminal as a major transportation hub within East Midtown and the city; expanding and enhancing the pedestrian circulation network connecting Grand Central Terminal to surrounding development and minimizing pedestrian congestion; and protecting the iconic character of the surrounding area. Such regulations establish special provisions governing maximum floor area, sustainability, urban design and streetscape enhancements, the transfer of development rights from landmarks, and the improvement of the surface and subsurface pedestrian circulation network in the East Midtown Subdistrict.

The regulations of Section 81-60 (SPECIAL REGULATIONS FOR THE EAST MIDTOWN SUBDISTRICT), inclusive, are applicable only in the East Midtown Subdistrict, the boundaries of which are shown on Map 1 (Special Midtown District and Subdistricts) and Map 2 (East Midtown Subdistrict and Subareas) in Appendix A of this Chapter. These regulations supplement or modify the provisions of this Chapter applying generally to the #Special Midtown District#, of which this Subdistrict is a part.

Where the #lot line# of a #zoning lot# coincides with the boundary of the public place located at the southerly prolongation of Vanderbilt Avenue between East 42nd Street and East 43rd Street, such #lot line# shall be considered to be a #street line# for the purposes of applying the #use#, #bulk# and urban design regulations of this Chapter.

81-611 - Applicability of regulations

LAST AMENDED
8/9/2017

The provisions of Section 81-60, inclusive, shall apply in the East Midtown Subdistrict as follows:

(a) Section 81-61, inclusive, sets forth general provisions, applicability and definitions for the East Midtown Subdistrict;

(b) Section 81-62, inclusive, sets forth special use provisions;

(c) Section 81-63, inclusive, sets forth special #floor area# provisions for the Vanderbilt Corridor Subarea;

(d) Section 81-64, inclusive, sets forth special #floor area# provisions for #qualifying sites#;

(e) Section 81-65, inclusive, sets forth special #floor area# provisions for all other #zoning lots#;

(f) Section 81-66, inclusive, sets forth certain height and setback modifications to the provisions of Sections 81-26 and 81-27;

(g) Section 81-67, inclusive, sets forth certain modifications to the mandatory district plan elements of Section 81-40, inclusive; and

(h) Section 81-68, inclusive, sets forth additional provisions pertaining to #qualifying sites#.

81-612 - Applicability along district boundaries

LAST AMENDED
8/9/2017

For #zoning lots# divided by district boundaries, the underlying provisions shall apply, except as follows:

(a) For #qualifying sites# divided by district boundaries where both districts have the same maximum #floor area ratio# set forth in Rows E and H of the table in Section 81-64 (Special Floor Area Provisions for Qualifying Sites), the provisions of Section 33-16 (Special Provisions for Zoning Lots Divided by District Boundaries) shall not apply to a #building# #developed# or, where permitted, #enlarged#, to exceed the basic maximum #floor area# in Row A of the table in Section 81-64. In lieu thereof, the #floor area# of such #building# on a #qualifying site# may be located anywhere on the #zoning lot#, regardless of the district boundary.

(b) In addition to the requirements set forth in Sections 81-25 (General Provisions Relating to Height and Setback of Buildings) and 81-40 (MANDATORY DISTRICT PLAN ELEMENTS), the provisions of Section 81-60, inclusive, shall apply to a #zoning lot# having 50 percent or more of its #lot area# within the East Midtown Subdistrict. For the purposes of Section 81-60, inclusive, all such #zoning lots# shall be deemed to be entirely within the Subdistrict. If any of the provisions of Sections 81-25, 81-40 and 81-60, inclusive, are in conflict, the regulations of Section 81-60, inclusive, shall govern. However, for #zoning lots# located partly within the East Midtown Subdistrict and partly within the Fifth Avenue Subdistrict, the provisions of Article VII, Chapter 7 shall apply.

(c) For #zoning lots# divided by subarea boundaries, the provisions of Article VII, Chapter 7 shall apply.

(d) For #zoning lots# with #landmark buildings or other structures# where more than 50 percent of the #lot area# is located within the #Special Midtown District#, and which #abut# the East Midtown Subdistrict boundary, such #zoning lot# may be considered as

part of the Subdistrict for the purposes of transferring development rights pursuant to the applicable provisions of Sections 81-642 (Transfer of development rights from landmarks to qualifying sites) or 81-653 (Special permit for transfer of development rights from landmarks to non-qualifying sites). However, the maximum amount of #floor area# that may be transferred from a #granting lot#, or portion thereof, located outside the Special Midtown District shall be the maximum #floor area ratio# permitted under the applicable underlying zoning district.

81-613 - Definitions

LAST AMENDED
8/9/2017

Adjacent lot

For the purposes of Section 81-60, inclusive, an "adjacent lot" is:

(a) a #zoning lot# that is contiguous to the lot occupied by the designated #landmark building or other structure# or one that is across a #street# and opposite the lot occupied by such designated #landmark building or other structure#, or, in the case of a #corner lot#, one that fronts on the same #street# intersection as the lot occupied by such #landmark building or other structure#; and

(b) in C5-3 or C6-6 Districts, a #zoning lot# that is contiguous to, or across a #street# and opposite another lot or series of lots that, except for the intervention of #streets# or #street# intersections, extend to the lot occupied by such designated #landmark building or other structure#. All such lots shall be in the same ownership (fee ownership or ownership as defined under #zoning lot# in Section 12-10 (DEFINITIONS).

Granting lot

For the purposes of Section 81-60, inclusive, a “granting lot” shall mean a #zoning lot# that contains a #landmark building or other structure#. Such #granting lot# may transfer development rights pursuant to Sections 81-632 (Special permit for transfer of development rights from landmarks to the Vanderbilt Corridor Subarea), 81-642 (Transfer of development rights from landmarks to qualifying sites), or 81-653 (Special permit for transfer of development rights from landmarks to non-qualifying sites).

Landmark building or other structure

For the purposes of Section 81-60, inclusive, a “landmark building or other structure” shall include any structure designated as a landmark by the Landmarks Preservation Commission pursuant to the New York City Charter and Administrative Code, but shall not include those portions of #zoning lots# used for cemetery purposes, statues, monuments or bridges. No transfer of development rights is permitted pursuant to Section 81-60, inclusive, from those portions of #zoning lots# used for cemetery purposes, or any structures within historic districts, statues, monuments or bridges.

Non-qualifying site

For the purposes of Section 81-60, inclusive, a “non-qualifying site” shall refer to a #zoning lot# that does not meet the criteria for a #qualifying site# and is located in a subarea other than the Vanderbilt Corridor Subarea.

Public Realm Improvement Fund

For the purposes of Section 81-60, inclusive, the “Public Realm Improvement Fund” (the “Fund”) shall be a separate interest-bearing

account established for the deposit of contributions made when #developments# or, where permitted, #enlargements# on #qualifying sites# in the East Midtown Subdistrict will exceed the basic maximum #floor area ratio# set forth in Section 81-64 (Special Floor Area Provisions for Qualifying Sites) through their utilization of the provisions of Sections 81-642 (Transfer of development rights from landmarks to qualifying sites), 81-643 (Special provisions for retaining non-complying floor area in commercial buildings) or 81-685 (Special permit to modify qualifying site provisions). The Fund shall be utilized, at the discretion of the #Public Realm Improvement Fund Governing Group#, to provide funding to implement improvements to the East Midtown Subdistrict, and its immediate vicinity, in the Borough of Manhattan. Upon receipt of any contribution, the #Public Realm Improvement Fund Governing Group# or the Department of City Planning shall notify the Comptroller of the City of New York and the Speaker of the New York City Council and promptly deposit it into the Fund.

Public Realm Improvement Fund Development Rights Valuation

For the purposes of Section 81-60, inclusive, the "Public Realm Improvement Fund Development Rights Valuation" ("Development Rights Valuation") shall be a value per square foot of transferable development rights in the East Midtown Subdistrict, which shall provide a basis for establishing a minimum contribution to the #Public Realm Improvement Fund#. As of August 9, 2017, the Development Rights Valuation shall be set at $307.45 per square foot.

When proposing an adjustment to the Development Rights Valuation, the Department of City Planning shall undertake a transferrable development rights valuation study conducted by qualified professionals utilizing industry best practices. The City Planning Commission shall, by rule, review and adjust the Development Rights Valuation, pursuant to the City Administrative Procedures Act not more than once every three years and not less than once every five years.

An applicant, upon written request to the Commission, may request a transferable development rights valuation study to evaluate whether the Development Rights Valuation should be modified for a particular #qualifying site# based upon any recent changes in market conditions within the Subdistrict. The study must be paid for by the applicant and completed within a one-year timeframe. The Department of City Planning shall initiate the study, to be conducted by qualified professionals utilizing industry best practices. Where the study demonstrates that the value of the development rights for the #qualifying site# is less than the Development Rights Valuation, the Commission shall, by certification, and in connection with a certification pursuant to Section 81-642 (Transfer of development rights from landmarks to qualifying sites), modify the required contribution to 20 percent of the adjusted valuation.

Public Realm Improvement Fund Governing Group

For the purposes of Section 81-60, inclusive, the "Public Realm Improvement Fund Governing Group" (the "Governing Group") shall be established to administer the #Public Realm Improvement Fund# (the "Fund"), and shall consist of 13 members: seven members shall be representatives of City agencies, appointed by and serving at the pleasure of the Mayor; one member shall be a representative of a citywide civic organization, appointed by the Office of the Manhattan Borough President; one member shall be a representative of the Office of the Manhattan Borough President; one member shall be a representative of the New York City Council member representing the City Council district encompassing the largest portion of the East Midtown Subdistrict; one member shall be a representative of the Speaker of the City Council; one member shall be a representative of Manhattan Community Board 5; and one member shall be a representative of Manhattan Community Board 6. The Governing Group shall be a local development corporation, organized pursuant to the New York State Not-for-Profit Corporation Law, and affiliated with City government for purposes of the New York State Public Authorities Law, whose organizational purpose shall be limited solely to the purposes set forth in this Chapter. Each member shall have one vote, and all Governing Group decisions, as set forth below, shall be upon a majority vote at a public meeting at which a quorum is present. A quorum shall consist of a majority of the members.

The purpose of the Governing Group shall be to bolster and enhance East Midtown's status as a premier central business district with a high-quality public realm, by allocating funds from the Fund to implement public realm improvement projects. The Governing Group shall establish and maintain a Public Realm Improvement Concept Plan ("Concept Plan") for the purpose of creating a list of priority improvements, and shall have the authority to amend such Concept Plan, and associated list of improvements, as necessary. All priority improvements in the Concept Plan shall meet the criteria set forth in Section 81-683 (Criteria for improvements in the Public Realm Improvement Concept Plan).

Establishment of the Concept Plan, amendment of the Concept Plan, calendaring of items for a vote to fund, and designation of funding for a specific public realm improvement on the Concept Plan shall be decisions requiring a majority vote of the Governing Group at a meeting at which a quorum is present. If only members of the Governing Group appointed by the Mayor vote to calendar a particular public realm improvement for a vote to fund it, the Governing Group shall conduct a public hearing on the matter prior to such improvement being placed on the calendar for vote. In addition, if any member of the Governing Group puts forth a proposed public realm improvement, discussion of such improvement shall be added to the agenda of the next public meeting. Establishment of the initial Concept Plan shall be completed no later than November 1, 2017.

In the event that more than 20 million dollars remains in the Fund for more than three years, the Governing Group shall be required to hold a vote either to fund a public realm improvement project or to retain the funds.

The Governing Group shall adopt procedures for the conduct of its activities. Such procedures shall be consistent with the requirements of the New York State Open Meetings Law (Article 7, NYS Public Officers Law), which procedures shall also be consistent with the goals of the Subdistrict. Those procedures shall be publicly available by posting on the Department of City Planning's website, and shall include rules requiring reporting and transparency including, but not limited to, the following: procedures on the adoption and amendment of the concept plan and opportunity for public comment thereon; requirements to provide a transcript or recording of all public meetings and hearings; and transparency and annual reporting requirements concerning deposits into and expenditures from the Fund. The Governing Group shall annually update the Concept Plan by providing a list of all projects on the Concept Plan to date, those added or removed in the past year, the dollar amount of funds designated to each project on the Concept Plan, to the extent available, the estimated cost of each project on the Concept Plan, and the schedule for all projects for which a decision to designate funding has been made by the Governing Group. Such annual update shall be posted on the Department of City Planning's website no later than January 15 of each calendar year following the establishment of the initial Concept Plan. All meetings of the Governing Group shall be open to the public with advance public notice provided of all meetings and public hearings.

Qualifying site

For the purposes of Section 81-60, inclusive, a "qualifying site" shall refer to a #zoning lot#:

(a) that is not located in the Vanderbilt Corridor Subarea;

(b) that has frontage along a #wide street#;

(c) where, at the time of #development# or, where permitted, #enlargement#, either:

(1) at least 75 feet of such #zoning lot's# #wide street# frontage is clear of #buildings or other structures#; or

(2) the entire #block# frontage along such #wide street# is occupied by one or more #landmark buildings or other structures#; or

(3) such #zoning lot's# #wide street# frontage is occupied by an existing easement volume that is being preserved, or reconfigured in accordance with Section 81-673 (Mass transit access);

(d) where a #building# is #developed# or, where permitted, #enlarged#, in accordance with the #floor area# provisions of Section 81-64 (Special Floor Area Provisions for Qualifying Sites), and such #development# or, where permitted, #enlargement# exceeds the basic maximum #floor area# set forth in Row A of the table in Section 81-64 and such #building# or publicly accessible space occupies the cleared area in paragraph (c)(1) of this definition, unless the provisions of paragraphs (c)(2) or (c)(3) apply;

(e) where a maximum of 20 percent of the #floor area# permitted on such #zoning lot# is allocated to #residential uses#; and

(f) where such #building# being #developed# or, where permitted, #enlarged#, complies with the performance requirements of paragraph (a) and the publicly accessible space requirements of paragraph (b) of Section 81-681 (Mandatory requirements for qualifying sites).

Receiving lot

For the purposes of Section 81-60, inclusive, a "receiving lot" shall mean a #zoning lot# to which development rights of a #granting lot# are transferred. Such #receiving lot# may receive a transfer of development rights pursuant to Sections 81-632 (Special permit for transfer of development rights from landmarks to the Vanderbilt Corridor Subarea), 81-642 (Transfer of development rights from landmarks to qualifying sites), or 81-653 (Special permit for transfer of development rights from landmarks to non-qualifying sites).

Sale price

For the purposes of Section 81-60, inclusive, "sale price" shall mean the total consideration exchanged for transferred #floor area# pursuant to certification to transfer development rights from #zoning lots# occupied by #landmark buildings or other structures# within the East Midtown Subdistrict to a #qualifying site#. The total consideration shall include all consideration as defined in Chapter 21 of the Administrative Code of the City of New York and Title 19 of the Rules of the City of New York, as they may be amended, or their successor provisions, whether or not subject to tax under that Chapter. The total consideration shall also include any other compensation in whatever form received in exchange for the #floor area#, including contingent consideration. A valuation prepared pursuant to procedures established by rule of the City Planning Commission or the New York City Department of Finance shall be required for all consideration in a form other than cash. The application for certification shall include affidavits from the buyer and seller, attesting under penalty of perjury, that all of the terms of the transaction and all the consideration have been disclosed, and may be subject to audit.

81-62 - Special Use Provisions

LAST AMENDED
8/9/2017

81-621 - Location of uses in mixed buildings

LAST AMENDED
8/9/2017

For #mixed buildings# #developed# on #qualifying sites#, the provisions of Section 32-422 (Location of floors occupied by commercial uses) are modified to permit the following #uses#, subject to the underlying zoning district regulations, on the same #story# as, or at any #story# above, #residential# #uses#, provided that no access exists between such #uses# at any level above the ground floor:

open or enclosed observation decks;

open or enclosed publicly accessible spaces;

eating or drinking establishments, as listed in Use Groups 6A, 6C, 10A and 12A;

bowling alleys, as listed in Use Group 8A and 12A;

theaters, as listed in Use Group 8A;

commercial art galleries, as listed in Use Group 6C;

#health and fitness establishments#, as listed in Use Groups 6C and 9A;

wedding chapels and banquet halls, as listed in Use Group 9A;

enclosed skating rinks, as listed in Use Group 12A; and

swimming pools and gymnasium #uses# which are #accessory# to any other #use# located within the #building#.

For such #uses#, the provisions of Section 32-41 (Enclosure Within Buildings) shall not apply.

81-63 - Special Floor Area Provisions for the Vanderbilt Corridor Subarea

LAST AMENDED
10/7/2021

For #non-residential buildings# or #mixed buildings# in the Vanderbilt Corridor Subarea of the East Midtown Subdistrict, as shown on Map 2 (East Midtown Subdistrict and Subareas) in Appendix A of this Chapter, the basic maximum #floor area ratios# of the underlying districts shall apply as set forth in this Section. Such basic maximum #floor area ratio# on any #zoning lot# may be increased by bonuses or other #floor area# allowances only in accordance with the provisions of this Chapter, and the maximum #floor area ratio# with such additional #floor area# allowances shall in no event exceed the amount set forth for each underlying district in the following table:

Means for Achieving Permitted FAR Levels on a #Zoning Lot# in the Vanderbilt Corridor Subarea	Maximum #Floor Area Ratio# (FAR)
A.Basic Maximum FAR	15
B. Maximum #Floor Area# Allowances: (District-wide Incentives), #Mass transit station# improvements (Section 66-51)	3.0
C. Maximum FAR of Lots Involving Landmarks:	
Maximum FAR of a lot containing non bonusable landmark (Section 74-711 or as-of-right)	15.0
Development rights (FAR) of a landmark lot for transfer purposes (Section 74-79)	15.0
Maximum amount of transferable development rights (FAR) from a landmark #zoning lot# that may be utilized on:	
(a) an #adjacent lot# (Section 74-79)	No Limit
(b) a #receiving lot# (Section 81-632)	15.0
D. Maximum #Floor Area# Allowances by Special Permit for Grand Central public realm improvements (Section 81-633)	15.0
E. Maximum Total FAR of a Lot with Transferred Development Rights on #receiving lots# (Section 81-632) or District-wide Incentives (including Section 81-633)	30.0

F. Maximum Total FAR of a Lot with Transferred Development Rights on an #adjacent lot#(Section 74-79) or District-wide Incentives (other than Section 81-633)	No Limit

Any transfer of development rights from a landmark site may be made pursuant to either Section 74-79 or Section 81-632 (Special permit for transfer of development rights from landmarks to the Vanderbilt Corridor Subarea), but not both.

81-631 - Special provisions for transfers of development rights in the Vanderbilt Corridor Subarea

LAST AMENDED
8/9/2017

All applications for transfers of development rights pursuant to the special permit by the City Planning Commission in Section 81-632 (Special permit for transfer of development rights from landmarks to the Vanderbilt Corridor Subarea) shall also comply with the regulations of this Section.

(a) Requirements for applications

In addition to the land use review application requirements, an application filed with the City Planning Commission for a special permit pursuant to Section 81-632 shall be made jointly by the owners of the #granting lot# and #receiving lot# and shall include:

(1) site plan and zoning calculations for the #granting lot# and #receiving lot#;

(2) a program for the continuing maintenance of the landmark;

(3) a report from the Landmarks Preservation Commission concerning the continuing maintenance program of the landmark and, for those "receiving" sites in the immediate vicinity of the landmark, a report concerning the harmonious relationship of the #development# or #enlargement# to the landmark;

(4) a plan of any required pedestrian network improvement; and

(5) any such other information as may be required by the City Planning Commission.

A separate application shall be filed for each transfer of development rights to an independent #receiving lot# pursuant to Section 81-632.

(b) Conditions and limitations

The transfer of development rights from a #granting lot# to a #receiving lot#, pursuant to Section 81-632, shall be subject to the following conditions and limitations:

(1) the maximum amount of #floor area# that may be transferred from a #granting lot# shall be the maximum #floor area# allowed by Section 33-12 for #commercial buildings# on such landmark #zoning lot#, as if it were undeveloped, less the total #floor area# of all existing #buildings# on the landmark #zoning lot#;

(2) for each #receiving lot#, the #floor area# allowed by the transfer of development rights under Section 81-632 shall be in addition to the maximum #floor area# allowed by the district regulations applicable to the #receiving lot#, as shown in the table in Section 81-63 (Special Floor Area Provisions for the Vanderbilt Corridor Subarea); and

(3) each transfer, once completed, shall irrevocably reduce the amount of #floor area# that may be #developed# or #enlarged# on the #granting lot# by the amount of #floor area# transferred. If the landmark designation is removed, the #landmark building or other structure# is destroyed or #enlarged#, or the #zoning lot# with the #landmark building or other

structure# is redeveloped, the #granting lot# may only be #developed# or #enlarged# up to the amount of permitted #floor area# as reduced by each transfer.

(c) Transfer instruments and notice of restrictions

The owners of the #granting lot# and the #receiving lot# shall submit to the Commission a copy of the transfer instrument legally sufficient in both form and content to effect such a transfer. Notice of the restrictions upon further #development# or #enlargement# of the #granting lot# and the #receiving lot# shall be filed by the owners of the respective lots in the Office of the Register of the City of New York (County of New York), a certified copy of which shall be submitted to the Commission.

Both the instrument of transfer and the notice of restrictions shall specify the total amount of #floor area# transferred and shall specify, by lot and block numbers, the lots from which and the lots to which such transfer is made.

81-632 - Special permit for transfer of development rights from landmarks to the Vanderbilt Corridor Subarea

LAST AMENDED
8/9/2017

Within the Vanderbilt Corridor Subarea, as shown on Map 2 (East Midtown Subdistrict and Subareas) in Appendix A of this Chapter, the City Planning Commission may permit the transfer of development rights from a #granting lot# in the Grand Central Core Area, as shown on Map 2, to a to a #receiving lot#, and, in conjunction with such transfer, the Commission may permit modifications to #bulk# regulations, mandatory plan elements, and provisions regarding #zoning lots# divided by district boundaries, as set forth in paragraph (a) of this Section, provided that the Commission determines that the #development# or #enlargement# complies with the conditions of paragraph (b), the findings of paragraph (c) and the additional requirements of paragraph (d) of this Section.

(a) The Commission may permit:

(1) a transfer of development rights from a #granting lot# to a #receiving lot# provided that the resultant #floor area ratio# on the "receiving lot" does not exceed 30.0;

(2) modifications of the provisions of Sections 77-02 (Zoning Lots not Existing Prior to Effective Date or Amendment of Resolution), 77-21 (General Provisions), 77-22 (Floor Area Ratio) and 77-25 (Density Requirements) for any #zoning lot#, whether or not it existed on December 15, 1961, or any applicable subsequent amendment thereto, #floor area# or #dwelling units# permitted by the district regulations which allow a greater #floor area ratio# may be located within a district that allows a lesser #floor area ratio#;

(3) in the case of an #enlargement# to an existing #building# utilizing the transfer of development rights from a designated landmark, modifications of the provisions of Sections 81-66 (Special Height and Setback Requirements), 81-671 (Special street wall requirements), 81-674 (Ground floor use provisions), 81-675 (Curb cut restrictions and loading berth requirements), 81-676 (Pedestrian circulation space requirements), and Sections 81-25 (General Provisions Relating to Height and Setback of Buildings), 81-26 (Height and Setback Regulations-Daylight Compensation) and 81-27 (Alternate Height and Setback Regulations-Daylight Evaluation) in order to accommodate existing structures and conditions;

(4) for #zoning lots# of more than 40,000 square feet of #lot area# that occupy an entire #block#, modifications of #bulk# regulations, except #floor area ratio# regulations; and

(5) modifications, whether singly or in any combination, to:

(i) the #street wall# regulations of Sections 81-43 (Street Wall Continuity Along Designated Streets), inclusive, or 81-671, inclusive;

(ii) the height and setback regulations of Sections 81-26, inclusive, 81-27, inclusive, or 81-661; or

(iii) the mandatory district plan elements of Sections 81-42 (Retail Continuity Along Designated Streets), 81-44 (Curb Cut Restrictions), 81-45 (Pedestrian Circulation Space), 81-46 (Off-street Relocation or Renovation of a Subway Stair), 81-47 (Major Building Entrances), 81-48 (Off-street Improvement of Access to Rail Mass Transit Facility), 81-674 (Ground floor use provisions), 81-675 (Curb cut restrictions and loading berth requirements), 81-676 (Pedestrian circulation space requirements) or 37-50 (REQUIREMENTS FOR PEDESTRIAN CIRCULATION SPACE), inclusive, except that no modifications to the required amount of pedestrian circulation space set forth in Section 37-51 shall be permitted.

(b) Conditions

As a condition for granting a special permit pursuant to this Section, the design of the #development# or #enlargement# shall include a major improvement of the above- or below-grade, pedestrian or mass transit circulation network in the Grand Central Core Area. However, this condition may be waived by the Commission, where appropriate, or may be deemed to have been met by utilization of the provisions of Section 81-633 (Special permit for Grand Central public realm improvements). The improvement shall increase the general accessibility and security of the network, reduce points of pedestrian congestion and improve the general network environment through connections into planned expansions of the network. The improvement may include, but is not limited to, widening, straightening or expansion of the existing pedestrian network, reconfiguration of circulation routes to provide more direct pedestrian connections between the #development# or #enlargement# and Grand Central Terminal, and provision for direct daylight access, retail in new and existing passages, and improvements to air quality, lighting, finishes and signage.

The special permit application to the Commission shall include information and justification sufficient to provide the Commission with a basis for evaluating the benefits to the general public from the proposed improvement. As part of the special permit application, the applicant shall submit schematic or concept plans of the proposed improvement to the Department of City Planning, as well as evidence of such submission to the Metropolitan Transportation Authority (MTA) and any other entities that retain control and responsibility for the area of the proposed improvement. Prior to ULURP certification of the special permit application, the MTA and any other entities that retain control and responsibility for the area of the proposed improvement shall each provide a letter to the Commission containing a conceptual approval of the improvement including a statement of any considerations regarding the construction and operation of the improvement.

(c) Findings

In order to grant a special permit for the transfer of development rights to a #receiving lot#, the Commission shall find that:

(1) a program for the continuing maintenance of the landmark has been established;

(2) for any proposed improvement required pursuant to this Section:

(i) the improvement to the above- or below-grade pedestrian or mass transit circulation network provided by the #development# or #enlargement# increases public accessibility to and from Grand Central Terminal;

(ii) the streetscape, the site design and the location of #building# entrances contribute to the overall improvement of pedestrian circulation within the surrounding area and minimize congestion on surrounding #streets#; and

(iii) a program is established to identify solutions to problems relating to vehicular and pedestrian circulation problems and the pedestrian environment within the surrounding area;

(3) where appropriate, the design of the #development# or #enlargement# includes provisions for public amenities including, but not limited to, publicly accessible open spaces, and subsurface pedestrian passageways leading to subway or rail mass transit facilities;

(4) for #developments# or #enlargements# with a proposed #floor area ratio# in excess of 21.6, the #building# has met the ground floor level, building design, sustainable design measures and, for #zoning lots# not located on two #wide streets#, the site characteristic considerations set forth in the applicable conditions and findings of Section 81-633 (Special permit for Grand Central public realm improvements);

(5) where the modification of #bulk# regulations is proposed:

(i) any proposed modification of regulations governing #zoning lots# divided by district boundaries or the permitted transfer of #floor area# will not unduly increase the #bulk# of any #development# or #enlargement# on the #receiving lot#, density of population or intensity of #use# on any #block# to the detriment of the occupants of #buildings# on the #block# or the surrounding area;

(ii) for #enlargements# to existing #buildings#, any proposed modifications of height and setback requirements and the requirements of Section 81-66 are necessary because of the inherent constraints or conditions of the existing #building#, that the modifications are limited to the minimum needed, and that the proposal for modifications of height and setback requirements demonstrates to the satisfaction of the Commission that an integrated design is not feasible for the proposed #enlargement# which accommodates the transfer of development rights due to the conditions imposed by the existing #building# or configuration of the site; and

(iii) for #developments# or #enlargements# on #zoning lots# of more than 40,000 square feet of #lot area# that occupy an entire #block#, any proposed modifications of #bulk# regulations are necessary because of inherent site constraints and that the modifications are limited to the minimum needed; or

(6) any proposed modifications to #street walls#, height and setback regulations and mandatory plan elements meet the applicable application requirements and findings set forth in Section 81-634 (Permitted modifications in conjunction with

additional floor area).

(d) Additional requirements

Prior to the grant of a special permit, the applicant shall obtain approvals of plans from the MTA and any other entities that retain control and responsibility for the area of the proposed improvement, and, if appropriate, the applicant shall sign a legally enforceable instrument running with the land, setting forth the obligations of the owner and developer, their successors and assigns, to construct and maintain the improvement and shall establish a construction schedule, a program for maintenance and a schedule of hours of public operation and shall provide a performance bond for completion of the improvement.

The written declaration of restrictions and any instrument creating an easement on privately owned property shall be recorded against such private property in the Office of the Register of the City of New York (County of New York) and a certified copy of the instrument shall be submitted to the Commission.

No temporary certificate of occupancy for any #floor area# of the #development# or #enlargement# on a #receiving lot# shall be granted by the Department of Buildings until all required improvements have been substantially completed as determined by the Chairperson of the City Planning Commission and the area is usable by the public. Prior to the issuance of a permanent certificate of occupancy for the #development# or #enlargement#, all improvements shall be 100 percent complete in accordance with the approved plans and such completion shall have been certified by letter from the MTA.

The Commission may prescribe appropriate conditions and safeguards to minimize adverse effects on the character of the surrounding area.

81-633 - Special permit for Grand Central public realm improvements

LAST AMENDED
8/9/2017

For #developments# and #enlargements# on #zoning lots# located within the Vanderbilt Corridor Subarea, as shown on Map 2 (East Midtown Subdistrict and Subareas) in Appendix A of this Chapter, the City Planning Commission may allow, by special permit, #floor area# in excess of the basic maximum #floor area ratio# established in the table in Section 81-63 (Special Floor Area Provisions for the Vanderbilt Corridor Subarea), up to the maximum #floor area# set forth in the table, in accordance with the provisions of this Section.

All applications for a special permit for additional #floor area# pursuant to this Section shall include on-site or off-site, above- or below-grade improvements to the pedestrian or mass transit circulation network, or a combination thereof, in the Grand Central Core Area, as shown on Map 2. In addition, requirements pertaining to the ground floor level, building design and sustainable design measures are set forth in this Section in order to ensure that any #development# or #enlargement# receiving additional #floor area# constitutes an exceptional addition to the #Special Midtown District#.

To approve a special permit application for additional #floor area#, the Commission shall determine that such #development# or #enlargement# complies with the conditions and application requirements of paragraph (a), the findings of paragraph (b) and the additional requirements of paragraph (c) of this Section.

(a) Conditions and application requirements

All applications for a special permit for additional #floor area# pursuant to this Section shall include the following:

(1) Above- or below-grade improvements to the pedestrian or mass transit circulation network.

In order to ensure that the proposed #development# or #enlargement# contributes to the improvement of pedestrian and mass transit circulation in the Grand Central Core Area, especially in the vicinity of Grand Central Terminal, any

#development# or #enlargement# proposed under the provisions of this Section shall include above- or below-grade public realm improvements.

(i) Where a #development# or #enlargement# proposes the inclusion of above-grade public realm improvements, such improvements may consist of on-site or off-site improvements to the pedestrian circulation network, or a combination thereof.

On-site, above-grade public realm improvements shall consist of open or enclosed publicly accessible spaces, of ample size, provided for public use and enjoyment. Such publicly accessible spaces shall include amenities characteristic of #public plazas# or public atriums, as applicable, and include amenities for the comfort and convenience of the public.

Off-site, above-grade public realm improvements shall consist of major improvements to the public right-of-way that support pedestrian circulation in the areas surrounding Grand Central Terminal. Where the area of such improvements is to be established as a pedestrian plaza, such improvements shall be characteristic of best practices in plaza design, as set forth by the Department of Transportation. Where the area of such improvements is along a #street# accommodating both vehicular and pedestrian access, such improvements shall be characteristic of current best practices in #street# design, as set forth by the Department of Transportation, and include improvements to the right-of-way such as pedestrian amenities, or streetscape, sidewalk, crosswalk and median enhancements.

(ii) Where a #development# or #enlargement# proposes the inclusion of below-grade public realm improvements, such improvements shall consist of on-site or off-site enhancements to the below-grade pedestrian and mass transit circulation network. Such improvements shall be characteristic of current best practice in mass-transit network design, and shall include improvements such as on-site or off-site widening, straightening, expanding or otherwise enhancing the existing below-grade pedestrian circulation network, additional vertical circulation, reconfiguring circulation routes to provide more direct pedestrian connections to subway or rail mass transit facilities, or providing daylight access, retail #uses#, or enhancements to noise abatement, air quality, lighting, finishes or rider orientation in new or existing passageways.

Applications shall include information and justification sufficient to provide the Commission with the basis for evaluating the benefits to the general public; determining the appropriate amount of bonus #floor area# to grant; and determining whether the applicable findings set forth in paragraph (b) of this Section have been met. Such application materials shall also include initial plans for the maintenance of the proposed improvements.

Where the Metropolitan Transportation Authority or any other City or State agency has control and responsibility for the area of a proposed improvement, the applicant shall submit concept plans for the proposed improvement to such agency and the Commission. At the time of certification of the application, any such agency with control and responsibility for the area of the proposed improvement shall each provide a letter to the Commission containing a conceptual approval of the improvement, including a statement of any considerations regarding the construction and operation of the improvement.

(2) Ground floor level

In order to ensure that the proposed #development# or #enlargement# contributes to the improvement of the pedestrian circulation network in the surrounding area, any #development# or #enlargement# proposed under the provisions of this Section shall provide enhancements to the ground floor level of the #building#, including, but not limited to, sidewalk widenings, streetscape amenities or enhancements to required pedestrian circulation spaces.

Where a #development# or #enlargement# includes #street# frontage along Madison Avenue or a #narrow street# between East 43rd Street and East 47th Street, sidewalk widenings shall be provided as follows:

(i) where a #development# or #enlargement# is on a #zoning lot# which occupies the entire #block# frontage along Madison Avenue, a sidewalk widening shall be provided along Madison Avenue, to the extent necessary, so that a minimum sidewalk width of 20 feet is achieved, including portions within and beyond the #zoning lot#. However,

no sidewalk widening need exceed 10 feet, as measured perpendicular to the #street line#;

(ii) where a #development# or #enlargement# is on a #zoning lot# that does not occupy the entire #block# frontage along Madison Avenue, a sidewalk widening shall be provided along Madison Avenue where all existing #buildings# on the #block# frontage have provided such a widening. Such required widening shall match the amount of widened sidewalk provided on adjacent #zoning lots#, provided that no sidewalk widening need exceed 10 feet, as measured perpendicular to the #street line#; or

(iii) where a #development# or #enlargement# with frontage on a #narrow street# between East 43rd Street and East 47th Street is on a #zoning lot# with a #lot width# of 100 feet or more, as measured along the #street line# of the #narrow street#, a sidewalk widening shall be provided along such #narrow street#, to the extent necessary, so that a minimum sidewalk width of 15 feet is achieved, including portions within and beyond the #zoning lot#. However, no sidewalk widening need exceed 10 feet, as measured perpendicular to the #street line#.

Applications shall contain a ground floor level site plan, and other supporting documents of sufficient scope and detail to enable the Commission to determine the type of proposed #uses# on the ground floor level, the location of proposed #building# entrances, the size and location of proposed circulation spaces, the manner in which such spaces will connect to the overall pedestrian circulation network and the above- or below-grade public realm improvements required pursuant to this Section and any other details necessary for the Commission to determine whether the applicable findings set forth in paragraph (b) of this Section have been met.

(3) Building design

In order to ensure that the proposed #development# or #enlargement# contributes to its immediate surroundings, with particular emphasis on Grand Central Terminal, any #development# or #enlargement# proposed under the provisions of this Section shall demonstrate particular attention to the building design, including, but not limited to, the proposed #uses#, massing, articulation and relationship to #buildings# in close proximity and within the Midtown Manhattan skyline.

Applications shall contain materials of sufficient scope and detail to enable the Commission to determine the proposed #uses# within the #building#, as well as the proposed #building# #bulk# and architectural design of the #building#, and to evaluate the proposed #building# in the context of adjacent #buildings# and the Midtown Manhattan skyline. Such materials shall include a description of the proposed #uses# within the #building#; measured elevation drawings, axonometric views, and perspective views showing such proposed #building# within the Midtown Manhattan skyline; and any other materials necessary for the Commission to determine whether the applicable findings set forth in paragraph (b) of this Section have been met.

For those #receiving lots# that are contiguous to a lot occupied by Grand Central Terminal or a lot that is across a #street# and opposite the lot occupied by Grand Central Terminal, or, in the case of a #corner lot#, one that fronts on the same #street# intersection as the lot occupied by Grand Central Terminal, applications shall contain a report from the Landmarks Preservation Commission concerning the harmonious relationship of the #development# or #enlargement# to Grand Central Terminal.

(4) Sustainable design measures

In order to foster the development of sustainable #buildings# in the Vanderbilt Corridor Subarea, any #development# or #enlargement# proposed under the provisions of this Section shall include sustainable design measures, including, but not limited to, enhancements to the energy performance, enhanced water efficiency, utilization of sustainable or locally sourced materials and attention to indoor environmental air quality of the #building#.

Applications shall contain materials of sufficient scope and detail to enable the Commission to determine whether the applicable findings in paragraph (b) of this Section have been met. In addition, any application shall include materials demonstrating the sustainable design measures of the #building#, including its anticipated energy performance, and the degree to which such performance exceeds either the New York City Energy Conservation Code (NYCECC) or the

Building Performance Rating method of the applicable version and edition of American Society of Heating, Refrigerating and Air Conditioning Engineers, Inc., Standard 90.1 (ASHRAE 90.1), as referenced within the NYCECC.

(b) Findings

The Commission shall find that:

(1) for a #development# or #enlargement# not located on two #wide streets#, the amount of additional #floor area# being granted is appropriate based on the extent to which any or all of the following physical factors are present in the #development# or #enlargement#:

(i) direct access to subway stations and other rail mass transit facilities;

(ii) the size of the #zoning lot#;

(iii) the amount of wide #street# frontage; and

(iv) adjacency to the open area above Grand Central Terminal;

(2) for above-grade improvements to the pedestrian circulation network that are located:

(i) on-site, the proposed improvements will, to the extent practicable, consist of a prominent space of generous proportions and quality design that is inviting to the public; improve pedestrian circulation and provide suitable amenities for the occupants; front upon a #street# or a pedestrian circulation space in close proximity to and within view of and accessible from an adjoining sidewalk; provide or be surrounded by active #uses#; be surrounded by transparent materials; provide connections to pedestrian circulation spaces in the immediate vicinity; and be designed in a manner that combines the separate elements within such space into a cohesive and harmonious site plan, resulting in a high-quality public space; or

(ii) off-site, the proposed improvements to the public right-of-way, to the extent practicable, will consist of significant street and sidewalk designs that improve pedestrian circulation in the surrounding area; provide comfortable places for walking and resting, opportunities for planting and improvements to pedestrian safety; and create a better overall user experience of the above-grade pedestrian circulation network that supports the surrounding area as a high-density business district. Where the area of such improvement is to be established into a pedestrian plaza that will undergo a public design and review process through the Department of Transportation subsequent to the approval of this special permit, the Commission may waive this finding;

(3) for below-grade improvements to the pedestrian or mass transit circulation network, the proposed improvements will provide:

(i) significant and generous connections from the above-grade pedestrian circulation network and surrounding #streets# to the below-grade pedestrian circulation network;

(ii) major improvements to public accessibility in the below-grade pedestrian circulation network between and within subway stations and other rail mass transit facilities in and around Grand Central Terminal through the provision of new connections, or the addition to or reconfiguration of existing connections; or

(iii) significant enhancements to the environment of subway stations and other rail mass transit facilities including daylight access, noise abatement, air quality improvement, lighting, finishes, way-finding or rider orientation, where practicable;

(4) the public benefit derived from the proposed above- or below-grade improvements to the pedestrian or mass transit circulation network merits the amount of additional #floor area# being granted to the proposed #development# or #enlargement# pursuant to this special permit;

(5) the design of the ground floor level of the #building#:

(i) contributes to a lively streetscape through a combination of retail #uses# that enliven the pedestrian experience, ample amounts of transparency and pedestrian connections that facilitate fluid movement between the #building# and adjoining public spaces; and demonstrates consideration for the location of pedestrian circulation space, #building# entrances, and the types of #uses# fronting upon the #street# or adjoining public spaces;

(ii) will substantially improve the accessibility of the overall pedestrian circulation network, reduce points of pedestrian congestion and, where applicable, establish more direct and generous pedestrian connections to Grand Central Terminal; and

(iii) will be well-integrated with on-site, above- or below-grade improvements required by this Section, where applicable and practicable;

(6) the design of the proposed #building#:

(i) ensures light and air to the surrounding #streets# and public spaces through the use of setbacks, recesses and other forms of articulation, and the tower top produces a distinctive addition to the Midtown Manhattan skyline which is well-integrated with the remainder of the #building#;

(ii) demonstrates an integrated and well-designed facade, taking into account factors such as #street wall# articulation and fenestration, that creates a prominent and distinctive #building# which complements the character of the surrounding area, especially Grand Central Terminal; and

(iii) involves a program that includes an intensity and mix of #uses# that are harmonious with the type of #uses# in the surrounding area;

(7) the proposed #development# or #enlargement# comprehensively integrates sustainable measures into the #building# and site design that:

(i) meet or exceed best practices in sustainable design; and

(ii) will substantially reduce energy usage for the #building#, as compared to comparable #buildings#; and

(8) in addition:

(i) the increase in #floor area# being proposed in the #development# or #enlargement# will not unduly increase the #bulk#, density of population or intensity of #uses# to the detriment of the surrounding area; and

(ii) all of the separate elements within the proposed #development# or #enlargement#, including above- or below-grade improvements, the ground floor level, #building# design, and sustainable design measures, are well–integrated and will advance the applicable goals of the #Special Midtown District# described in Section 81-00 (GENERAL PURPOSES).

(c) Additional requirements

Prior to the grant of a special permit pursuant to this Section, and to the extent required by the Metropolitan Transportation Authority (MTA) or any other City or State agencies with control and responsibility for the area in which a proposed improvement is to be located, the applicant shall execute an agreement, setting forth the obligations of the owner, its successors and assigns, to establish a process for design development and a preliminary construction schedule for the proposed improvement; construct the proposed improvement; where applicable, establish a program for maintenance; and, where applicable, establish a schedule of hours of public access for the proposed improvement. Where the MTA, or any other City or State agencies with control and responsibility for the area of a proposed improvement, deems necessary, such executed agreement shall set forth obligations of the applicant to provide a performance bond or other security for completion of the improvement in a form acceptable to the MTA or any other such agencies.

Where the proposed #development# or #enlargement# proposes an off-site improvement located in an area to be acquired by a City or State agency, the applicant may propose a phasing plan to sequence the construction of such off-site improvement. To

determine if such phasing plan is reasonable, the Commission may consult with the City or State agency that intends to acquire the area of the proposed improvement.

Prior to obtaining a foundation permit or building permit from the Department of Buildings, a written declaration of restrictions, in a form acceptable to the Chairperson of the City Planning Commission, setting forth the obligations of the owner to construct, and, where applicable, maintain and provide public access to public improvements provided pursuant to this Section, shall be recorded against such property in the Office of the Register of the City of New York (County of New York). Proof of recordation of the declaration of restrictions shall be submitted in a form acceptable to the Department of City Planning.

Except where a phasing plan is approved by the Commission, no temporary certificate of occupancy shall be granted by the Department of Buildings for the portion of the #building# utilizing bonus #floor area# granted pursuant to the provisions of this Section until the required improvements have been substantially completed, as determined by the Chairperson, acting in consultation with the MTA, or any other City or State agencies with control and responsibility for the area where a proposed improvement is to be located, where applicable, and such improvements are usable by the public. Such portion of the #building# utilizing bonus #floor area# shall be designated by the Commission in drawings included in the declaration of restrictions filed pursuant to this paragraph.

No permanent certificate of occupancy shall be granted by the Department of Buildings for the portion of the #building# utilizing bonus #floor area# until all improvements have been completed in accordance with the approved plans, as determined by the Chairperson, acting in consultation with the MTA, or any other City or State agencies with control and responsibility for the area where a proposed improvement is to be located, where applicable.

The Commission may prescribe appropriate conditions and safeguards to minimize adverse effects on the character of the surrounding area.

81-634 - Permitted modifications in conjunction with additional floor area

LAST AMENDED
8/9/2017

In conjunction with the grant of a special permit pursuant to Section 81-633 (Special permit for Grand Central public realm improvements), the City Planning Commission may permit modifications to #street walls#, height and setback regulations and mandatory plan elements, as set forth in paragraph (a) of this Section, provided that the Commission determines that the application requirements set forth in paragraph (b) and the findings set forth in paragraph (c) of this Section are met.

(a) The Commission may modify the following, whether singly or in any combination:

(1) the #street wall# regulations of Sections 81-43 (Street Wall Continuity Along Designated Streets) or 81-671 (Special street wall requirements), inclusive;

(2) the height and setback regulations of Sections 81-26 (Height and Setback Regulations - Daylight Compensation), inclusive, 81-27 (Alternate Height and Setback Regulations - Daylight Evaluation), inclusive, or 81-66 (Special Height and Setback Requirements); or

(3) the mandatory district plan elements of Sections 81-42 (Retail Continuity Along Designated Streets), 81-44 (Curb Cut Restrictions), 81-45 (Pedestrian Circulation Space), 81-46 (Off-street Relocation or Renovation of a Subway Stair), 81-47 (Major Building Entrances), 81-48 (Off-street Improvement of Access to Rail Mass Transit Facility), 81-674 (Ground floor use provisions), 81-675 (Curb cut restrictions and loading berth requirements), 81-676 (Pedestrian circulation space requirements) or 37-50 (REQUIREMENTS FOR PEDESTRIAN CIRCULATION SPACE), inclusive, except that no modifications to the required amount of pedestrian circulation space set forth in Section 37-51 shall be permitted.

(b) Application requirements

Applications for a special permit for modifications pursuant to this Section shall contain materials, of sufficient scope and detail, to

enable the Commission to determine the extent of the proposed modifications. In addition, where modifications to #street wall# or height and setback regulations are proposed, any application shall contain the following materials, at a minimum:

(1) drawings, including but not limited to, plan views and axonometric views, that illustrate how the proposed #building# will not comply with the #street wall# regulations of Section 81-43 or as such provisions are modified pursuant to Section 81-671, as applicable, and that illustrate how the proposed #building# will not comply with the height and setback regulations of Sections 81-26, 81-27 or as such provisions are modified pursuant to Section 81-66, as applicable;

(2) where applicable, formulas showing the degree to which such proposed #building# will not comply with the length and height rules of Section 81-26 or as such provisions are modified pursuant to Section 81-66; and

(3) where applicable, #daylight evaluation charts# and the resulting daylight evaluation score showing the degree to which such proposed #building# will not comply with the provisions of Section 81-27 or as such provisions are modified pursuant to Section 81-66.

(c) Findings

The Commission shall find that such proposed modifications:

(1) to the mandatory district plan elements will result in a better site plan for the proposed #development# or #enlargement# that is harmonious with the mandatory district plan element strategy of the #Special Midtown District#, as set forth in Section 81-41 (General Provisions); and

(2) to the #street wall# or height and setback regulations will result in an improved distribution of #bulk# on the #zoning lot# that is harmonious with the height and setback goals of the #Special Midtown District# set forth in Section 81-251 (Purpose of height and setback regulations).

The Commission may prescribe appropriate conditions and safeguards to minimize adverse effects on the character of the surrounding area.

81-64 - Special Floor Area Provisions for Qualifying Sites

LAST AMENDED
8/9/2017

For #non-residential buildings# or #mixed buildings# on #qualifying sites# in the East Midtown Subdistrict, the basic maximum #floor area ratios# of the underlying districts shall apply as set forth in this Section. Such basic maximum #floor area ratio# on any #zoning lot# may be increased by bonuses or other #floor area# allowances only in accordance with the provisions of this Chapter, and the maximum #floor area ratio# with such additional #floor area# allowances shall in no event exceed the amount set forth for each underlying district in the following table:

MAXIMUM FLOOR AREA RATIOS AND ALLOWANCES FOR QUALIFYING SITES

Means for Achieving Permitted FAR Levels on a #Zoning Lot# for #Qualifying Sites#	Grand Central Transit Improvement Zone Subarea		Park Avenue Subarea		Other Transit Improvement Zone Subarea		Southern Subarea		Northern Subarea[1]	
	C5-2.5	C5-3	C5-2.5	C5-3	C5-2.5 C6-4.5	C5-3 C6-6	C5-2.5 C6-4.5	C5-3 C6-6	C5-2.5 C6-4.5	C5-3 C6-6
A. Basic Maximum FAR										

	12	15	12	15	12	15	12	15	12	15
B. Minimum #Floor Area# Allowances through identified transit improvements (Section 81-641) if exceeding base maximum FAR										
	2.7	2.7	-	-	2.3	2.3	-	-	-	-
C. Maximum #Floor Area# Allowances through identified transit improvements (Section 81-641)										
	5.4	5.4	-	-	4.6	4.6	-	-	-	-
D. Maximum amount of transferable development rights (FAR) from landmark #zoning lots# that may be utilized on a #qualifying site# (Section 81-642)										
	12.3	9.3	13	10	8.7	5.7	9.6	6.6	6	3
E. Maximum as-of-right #Floor Area Ratio# on #qualifying sites#										
	27	27	25	25	23	23	21.6	21.6	18	18
F. Maximum FAR for transit improvement special permit (Section 81-644)										
	3	3	-	-	3	3	-	-	-	-
G. Maximum FAR for public concourse special permit (Section 81-645)										
	3	3	3	3	3	3	3	3	3	3
H. Maximum Total FAR on a #qualifying site#										
	30	30	28	28	26	26	24.6	24.6	21	21

[1] For #zoning lots# located east of Third Avenue between the centerline of East 46th Street to the centerline of East 51st Street, the maximum #floor area ratio# shall be the basic maximum #floor area ratio# set forth in Row A.

81-641 - Additional floor area for Transit Improvements on Qualifying Sites

LAST AMENDED
8/9/2017

All #developments# or, where permitted, #enlargements# on #qualifying sites# located within the Grand Central Transit Improvement Zone Subarea, or the Other Transit Improvement Zone Subarea, as shown on Map 2 (East Midtown Subdistrict and Subareas) in Appendix A of this Chapter, that exceed the basic maximum #floor area ratio# set forth in Row A of the table in Section 81-64 (Special Floor Area Provisions for Qualifying Sites) shall comply with the provisions of this Section.

The Chairperson of the City Planning Commission shall allow, by certification, #floor area# on a #qualifying site# to be increased above the applicable basic maximum #floor area ratio# provided that such resulting increase in #floor area ratio# is not less than the minimum specified in Row B of the table in Section 81-64, nor more than the maximum specified in Row C, as applicable, and further provided that a transit improvement, or a combination of transit improvements, will be constructed in the Grand Central Transit Improvement Zone Subarea, or the Other Transit Improvement Zone Subarea, in accordance with the provisions of this Section.

(a) The following requirements shall be completed prior to application for certification by the Chairperson:

(1) the applicant shall select a transit improvement that has been identified on the Priority Improvement List in Section 81-682 (Priority Improvement List for qualifying sites) and is commensurate with the minimum #floor area# required, and results in a #floor area ratio# increase not exceeding the maximum #floor area ratio# permitted to be achieved through the provisions of this Section. The process for such selection shall also comply with paragraph (a) of Section 81-682;

(2) the applicant shall submit preliminary plans for the proposed transit improvement to the Chairperson and any applicable City or State agencies with jurisdiction over and control of the proposed transit improvement;

(3) the applicant shall obtain and provide to the Chairperson a conceptual approval of the proposed transit improvement from any applicable City or State agencies with jurisdiction over and control of the proposed improvement in letter form, wherein such agencies state that such improvements meet the requirements set forth in Section 81-682; and

(4) prior to the issuance of a building permit, as set forth in this Section, the applicant shall execute agreements and legally enforceable instruments running with the land, setting forth the obligations of the owner and developer, their successors and assigns, to design and construct the improvement in accordance with the requirements of the applicable City or State agencies with jurisdiction over and control of the proposed improvement. Such agreements and instruments shall be filed and recorded in the Office of the Register of the City of New York (County of New York). Proof of recordation shall be sent to the Chairperson.

(b) The following items shall be submitted to the Chairperson as part of an application for certification:

(1) all of the materials required pursuant to paragraph (a) of this Section;

(2) site plans and zoning calculations for the proposed #development# or, where permitted, #enlargement# on the #qualifying site# showing the additional #floor area# associated with the completion of such transit improvement; and

(3) drawings including, but not limited to, plans, sections, elevations, three-dimensional projections or other drawings deemed necessary or relevant by the Chairperson for the transit improvement, and any such other information as may be required by the Chairperson.

When an applicant has submitted materials to the Chairperson that satisfy the requirements of paragraphs (a) and (b) of this Section, the Chairperson shall certify to the Department of Buildings that the #development# or, where permitted, #enlargement# on a #qualifying site# is in compliance with the provisions of this Section. Such certification shall be a precondition to the issuance of any foundation permit or new building permit by the Department of Buildings allowing a #development# or, where permitted, an #enlargement# on a #qualifying site# in the Grand Central Transit Improvement Zone Subarea, or the Other Transit Improvement Zone Subarea. All applications pursuant to this Section shall be referred to the affected Community Board, the local Council Member and the Manhattan Borough President. No certification shall be granted prior to 60 days after such referral.

No temporary certificate of occupancy shall be granted by the Department of Buildings for the portion of the #building# identified as utilizing the additional #floor area# granted pursuant to the provisions of this Section until the Chairperson, acting in consultation with the applicable City or State agencies having jurisdiction over and control of the proposed improvement, has certified that the improvements are substantially complete and usable by the public. Such portion of the #building# shall be designated by the applicant in drawings included in the instruments filed pursuant to paragraph (b) of this Section and shall be noted on the temporary certificate of occupancy.

No permanent certificate of occupancy shall be granted by the Department of Buildings for the portion of the #building# utilizing such additional #floor area# until the improvements have been finally completed in accordance with the approved plans and such final completion has been certified by the Chairperson, acting in consultation with the applicable City or State agencies having jurisdiction over

and control of the proposed improvement.

In addition, the Chairperson shall allow, by certification, a reduction in, or waiver of, the minimum #floor area ratio# required pursuant to Row B of the table in Section 81-64, where there are an insufficient number of available projects on the Priority Improvement List in Section 81-682. The Chairperson shall also allow, by certification, the maximum #floor area ratio# for a #qualifying site# to be increased beyond the limit set forth in Row C of the table in Section 81-64, where the Metropolitan Transportation Authority requires improvements to the Fifth Avenue and East 53rd Street Station to be combined in order to adequately phase improvements and avoid practical difficulties in operating the station.

81-642 - Transfer of development rights from landmarks to qualifying sites

LAST AMENDED
8/9/2017

The Chairperson of the City Planning Commission shall allow, by certification, a transfer of development rights from #zoning lots# occupied by #landmark buildings or other structures# within the East Midtown Subdistrict to a #qualifying site#, provided that the provisions of this Section are met.

(a) The transfer of development rights shall be subject to the following conditions:

(1) For #qualifying sites# in the Grand Central Transit Improvement Zone Subarea, or the Other Transit Improvement Zone Subarea, as shown on Map 2 (East Midtown Subdistrict and Subareas), the applicant shall obtain a certification pursuant to Section 81-641 (Additional floor area for transit improvements on qualifying sites) prior to, or in conjunction with, meeting the requirements of this Section.

(2) The maximum amount of #floor area# that may be transferred from a #granting lot# shall be the applicable basic maximum #floor area# set forth in Section 81-64 (Special Floor Area Provisions for Qualifying Sites), less the total #floor area# of all existing #buildings# on the landmark #zoning lot#, and any previously transferred #floor area#. In no event shall a #granting lot# transfer any previously granted bonus #floor area# received for subway station improvements, #publicly accessible open areas# or the provision of district improvements pursuant to the provisions of this Chapter, or any preceding regulations.

(3) For each #receiving lot#, the increased #floor area# allowed by the transfer of development rights pursuant to this Section shall not exceed the amount resulting in the maximum #floor area ratio# set forth in Row D of the table in Section 81-64.

(4) Each transfer, once completed, shall irrevocably reduce the amount of #floor area# that may be #developed# or #enlarged# on the #granting lot# by the amount of #floor area# transferred. If the landmark designation is removed from the #landmark building or other structure#, the #landmark building or other structure# is destroyed or #enlarged#, or the #zoning lot# with the #landmark building or structure# is redeveloped, the #granting lot# may only be #developed# or #enlarged# up to the amount of permitted #floor area# as reduced by each transfer.

(5) Prior to the issuance of a building permit, as set forth in paragraph (c) of this Section, the owners of the #granting lot# and the #receiving lot# shall submit to the Chairperson a copy of the transfer instrument legally sufficient in both form and content to effect such a transfer. Notice of the restrictions upon further #development# or #enlargement# of the #granting lot# and the #receiving lot# shall be filed by the owners of the respective lots in the Office of the Register of the City of New York (County of New York). Proof of recordation shall be submitted to the Chairperson.

Both the transfer instrument and the notices of restrictions shall specify the total amount of #floor area# transferred and shall specify, by lot and block numbers, the #granting lot# and the #receiving lot# that are a party to such transfer.

(6) Prior to the issuance of a building permit, as set forth in this Section, a non-refundable contribution shall have been deposited by the applicant into the #Public Realm Improvement Fund#. Such contribution shall be equal to the greater of:

(i) 20 percent of the #sales price# of the transferred #floor area#; or

(ii) an amount equal to 20 percent of the #Public Realm Improvement Fund Development Rights Valuation# multiplied by the amount of transferred #floor area#.

(b) An application filed with the Chairperson for certification pursuant to this Section shall be made jointly by the owners of the #granting lot# and the #receiving lot#. The following items shall be submitted to the Chairperson as part of an application for certification:

(1) for #qualifying sites# in the Grand Central Transit Improvement Zone Subarea, or the Other Transit Improvement Zone Subarea, materials that are sufficient to demonstrate compliance with the provisions of Section 81-641;

(2) site plans and zoning calculations for the #granting lot# and #receiving lot# showing the additional #floor area# associated with the transfer, and any such other information as may be required by the Chairperson;

(3) materials to demonstrate the establishment of a program for the continuing maintenance of the #landmark building or other structure#;

(4) a report from the Landmarks Preservation Commission concerning the continuing maintenance program of the #landmark building or other structure#; and

(5) for those #receiving lots# that are contiguous to a lot occupied by Grand Central Terminal or a lot that is across a #street# and opposite the lot occupied by Grand Central Terminal, or, in the case of a #corner lot#, one that fronts on the same #street# intersection as the lot occupied by Grand Central Terminal, a report from the Landmarks Preservation Commission concerning the harmonious relationship of the #development# or, where permitted, #enlargement# to Grand Central Terminal.

All applications pursuant to this Section shall be referred to the affected Community Board, the local Council Member and the Borough President of Manhattan. No certification shall be granted prior to 60 days after such referral.

The Chairperson shall certify to the Department of Buildings that a #development# or, where permitted, an #enlargement# on a #qualifying site# is in compliance with the provisions of this Section only after the following have been received:

(a) the instrument of transfer and notice of restrictions required by paragraph (a) of this Section have been executed and recorded with proof of recordation provided to the Chairperson;

(b) documents confirming the #sale price# have been provided to the Chairperson, including, but not limited to, the real property transfer tax return form recorded with the New York City Department of Finance and the details of consideration schedule; and

(c) payment of a non-refundable contribution to the #Public Realm Improvement Fund# in the amount required by paragraph (a) of this Section has been made.

Such certification shall be a precondition to the filing for or issuing of any building permit allowing more than the basic maximum #floor area ratio# for such #development# or, where permitted, #enlargement# on a #qualifying site#. Additional provisions are set forth in Section 81-686 for applicants undertaking a sidewalk improvement immediately adjacent to their #qualifying site#.

A separate application shall be filed for each transfer of development rights to an independent #receiving lot# pursuant to this Section.

81-643 - Special provisions for retaining non-complying floor area in commercial buildings

LAST AMENDED
8/9/2017

For #non-complying# #commercial buildings# existing on December 15, 1961 with #non-complying# #floor area#, the provisions of Section 54-41 (Permitted Reconstruction) may be modified to allow such #non-complying# #building# to be demolished or altered, to the extent of 75 percent or more of its total #floor area#, and reconstructed on a #qualifying site# to retain the amount of pre-existing #non-complying# #floor area# in accordance with the applicable district #bulk# regulations of this Chapter, upon certification by the

Chairperson of the City Planning Commission to the Department of Buildings first, that prior to demolition or alteration, the applicant meets the provisions of paragraph (a) of this Section, as applicable, and, subsequently, prior to reconstruction, the proposed #development# will comply with the applicable provisions of paragraph (b) of this Section. For purposes of this Chapter, the reconstruction of such #non-complying# #floor area# shall be considered a #development#. Any #enlargement# of a #non-complying# #commercial building# on a #qualifying site# shall be permitted only pursuant to paragraph (a) of Section 81-684 (Authorizations for qualifying sites), or Section 81-685 (Special permit to modify qualifying site provisions).

(a) Certification to demolish or alter a #non-complying# #building#

The Chairperson shall certify the amount of #non-complying# #floor area# existing within a #non-complying# #building# that may be reconstructed pursuant to the provisions of paragraph (b) of this Section, based on calculations submitted to the Chairperson. Such calculations shall be based on either the #building's# construction documents previously approved by the Department of Buildings at the time of such #building's# construction, #enlargement#, or subsequent alterations, as applicable; or on an as-built drawing set completed by a registered architect.

For the purpose of calculating the amount of #non-complying# #floor area# to be retained on #zoning lots# with multiple existing #buildings# at the time of application, the maximum amount of #non-complying# #floor area# that may be reconstructed shall be equivalent to the #floor area# of the #zoning lot# at the time of application, less the total #floor area# of all existing #buildings# to remain.

Certification pursuant to the provisions of paragraph (a) of this Section shall be a precondition to the issuance of any demolition or alteration permit by the Department of Buildings for a #zoning lot# reconstructing #non-complying# #floor area#.

(b) Certification to reconstruct #non-complying# #floor area#

The amount of #non-complying# #floor area# established pursuant to paragraph (a) of this Section may be reconstructed, provided that the Chairperson certifies that:

(1) all requirements for #qualifying sites# set forth in the definition in Section 81-613, inclusive, have been met, except that no publicly accessible space shall be required notwithstanding the provisions of paragraph (f) of the definition of #qualifying site#; and

(2) a non-refundable contribution has been deposited by the applicant into the #Public Realm Improvement Fund#. Such contribution shall be an amount equal to 20 percent of the #Public Realm Improvement Fund Development Rights Valuation# multiplied by the amount of such pre-existing #non-complying# #floor area#.

The payment of the non-refundable contribution to the #Public Realm Improvement Fund# pursuant to the provisions of paragraph (b) of this Section, shall be a precondition to the issuance of any foundation permit or new building or alteration permit by the Department of Buildings allowing a #development# on a #qualifying site#.

All applications pursuant to this Section shall be referred to the affected Community Board, the local Council Member and the Borough President of Manhattan. No certification shall be granted prior to 60 days after such referral.

Except for #zoning lots# located east of Third Avenue between the centerline of East 46th Street to the centerline of East 51st Street, any proposed #floor area# in the #development# beyond the amount contained in the pre-existing #non-complying# #building# may be obtained by utilizing the applicable provisions of Section 81-64 (Special Floor Area Provisions for Qualifying Sites). For the purposes of applying the provisions of such Section, the reconstructed #floor area ratio# shall be considered the basic maximum #floor area ratio#. However, the maximum #floor area ratios# of Row E and Row H of the table in Section 81-64 shall continue to apply.

81-644 - Special permit for transit improvements

LAST AMENDED
10/7/2021

For #qualifying sites# located in the Grand Central Transit Improvement Zone Subarea, or the Other Transit Improvement Zone Subarea, as shown on Map 2 (East Midtown Subdistrict and Subareas) in Appendix A of this Chapter, the City Planning Commission may permit a #floor area# bonus in accordance with the provisions of this Section, where a major improvement to a subway or rail mass transit facility is provided in accordance with the conditions of paragraph (b). All applications for a special permit pursuant to this Section shall be subject to the application requirements, findings and additional requirements of paragraphs (c) through (e).

As a pre-condition to applying for such special permit, an applicant shall demonstrate that the maximum as-of-right #floor area ratio# for #qualifying sites# set forth in Row E of the table in Section 81-64 has been achieved prior to, or in conjunction with, the special permit application.

(a) #Floor area# bonus

The City Planning Commission may permit an increase in the amount of #floor area ratio# permitted on a #qualifying site#, up to the amount specified in Row F of the table in Section 81-64 (Special Floor Area Provisions for Qualifying Sites).

(b) Conditions

All applications shall include proposed on-site or off-site improvements to a proximate subway or rail mass transit facility, that shall be characteristic of current best practice in mass-transit network design.

All applications shall include accessibility or capacity-enhancing improvements, including, but not limited to, the provision of elevators and escalators, widening, straightening, expanding or otherwise enhancing the existing pedestrian circulation network, or reconfiguring circulation routes to provide more direct pedestrian connections to subway or rail mass transit facilities. Where improvements are proposed for a subway or rail mass transit facilities that is not in compliance with the Americans with Disabilities Act, accessibility improvements shall be prioritized.

In addition to accessibility or capacity-enhancing improvements, environmental design or resiliency improvements may also be provided, including but not limited to, daylight access, retail #uses#, enhancements to noise abatement, air quality, lighting, finishes, or rider orientation in new or existing passageways, or flood resiliency upgrades.

All proposed improvements shall be subject to the approval of the Metropolitan Transportation Authority (MTA) and the City Planning Commission.

(c) Application requirements

All applications for a special permit pursuant to this Section shall include the following:

(1) Prior to submitting an application for a special permit pursuant to this Section, the applicant shall submit a schematic or concept plan for the proposed improvement to the MTA and the Chairperson of the City Planning Commission. Such schematic or concept plan shall include such materials and information sufficient to provide the basis for the #transit agencies# to evaluate and determine the constructability of such proposed improvement.

(2) At the time of certification, the Commission shall be provided with the following application materials:

(i) a letter from the MTA containing a conceptual approval of the improvement, including a statement of any considerations regarding the construction and operation of the improvement;

(ii) all information and justification sufficient to provide the Commission with the basis for evaluating the benefits of such improvements to the general public; and

(iii) initial plans for the maintenance of the proposed improvements.

(d) Findings

In order to grant such special permit, the Commission shall find that:

(1) the public benefit derived from the improvements to a subway or rail mass transit facility merits the amount of additional #floor area# being granted to the proposed #development# pursuant to this special permit;

(2) for accessibility or capacity-enhancing improvements, newly created or expanded accessible routes for persons with physical disabilities, or measures to improve station ingress and egress routes or platform capacity, such improvements will constitute significant enhancements to connectivity from the pedestrian circulation network to and through the subway or rail mass transit facility; and

(3) where environmental design or resiliency improvements are provided in addition to accessibility or capacity-enhancing improvements, such improvements will constitute significant enhancements to the station environment or its function.

(e) Additional requirements

In addition to the application requirements of paragraph (c) of this Section, additional requirements set forth in this paragraph shall apply.

(1) Prior to the granting of a special permit pursuant to this Section, the following requirements shall be met:

(i) To the extent required by the MTA, the applicant shall execute an agreement, setting forth the obligations of the owner, its successors and assigns, to establish a process for design development and a preliminary construction schedule for the proposed improvement; construct the proposed improvement; establish a program for maintenance and capital maintenance; and establish that such improvements shall be accessible to the public during the hours of operation of the station or as otherwise approved by the MTA. Where the MTA deems necessary, such executed agreement shall set forth obligations of the applicant to provide a performance bond or other security for completion of the improvement in a form acceptable to the MTA; and

(ii) The City Planning Commission shall be provided with a final letter of approval from the MTA stating that the drawings and other documents submitted by the applicant have been determined by the MTA to be of sufficient scope and detail to fix and describe the size and character of the improvement as to architectural, structural, mechanical and electrical systems, materials, relationship to existing site conditions and such other conditions as may be appropriate, and that the construction of the improvement in accordance with such submission is feasible.

(2) Prior to obtaining a foundation permit or building permit from the Department of Buildings, a written declaration of restrictions, in a form acceptable to the Chairperson of the City Planning Commission, containing complete drawings of the improvement and setting forth the obligations of the owner as agreed upon with the MTA pursuant to the requirements of paragraph (e)(1) of this Section, shall be recorded against such property in the Borough Office of the City Register of the City of New York. Proof of recordation of the declaration of restrictions shall be submitted in a form acceptable to the Department of City Planning.

(3) No temporary certificate of occupancy shall be granted by the Department of Buildings for the portion of the #building# utilizing bonus #floor area# granted pursuant to the provisions of this Section until the required improvements have been substantially completed, as determined by the Chairperson, acting in consultation with the MTA, where applicable, and such improvements are usable by the public. Such portion of the #building# utilizing bonus #floor area# shall be designated by the Commission in drawings included in the declaration of restrictions filed pursuant to this paragraph.

No permanent certificate of occupancy shall be granted by the Department of Buildings for the portion of the #building# utilizing bonus #floor area# until all improvements have been completed in accordance with the approved plans, as determined by the Chairperson, acting in consultation with the MTA, where applicable.

The Commission may prescribe additional appropriate conditions and safeguards to enhance the character of the surrounding area.

81-645 - Special permit for a public concourse

LAST AMENDED
8/9/2017

For #qualifying sites#, the City Planning Commission may permit an increase in the amount of #floor area ratio# permitted on such

#zoning lots#, up to the amount specified in Row G of the table in Section 81-64 (Special Floor Area Provisions for Qualifying Sites), as applicable, where an above-grade public concourse, in the form of an open or enclosed, publicly accessible space for public use and enjoyment, is provided on the #qualifying site#. Such publicly accessible spaces shall include amenities that are characteristic of #public plazas# or public atriums, as applicable, for the comfort and convenience of the public. In addition, to facilitate such public concourse, the Commission may permit the modification of provisions, other than #floor area ratio# regulations, of this Resolution.

As a pre-condition to applying for such special permit, an applicant shall demonstrate that the maximum as-of-right #floor area ratio# for #qualifying sites# set forth in Row E of the table in Section 81-64 has been achieved prior to, or in conjunction with, the special permit application.

In order for the City Planning Commission to approve a special permit application for additional #floor area#, the Commission shall determine that such #development# or, where permitted, #enlargement#, complies with the conditions and application requirements of paragraph (a), the findings of paragraph (b) and the additional requirements of paragraph (c) of this Section.

(a) Applications shall include information and justification sufficient to provide the Commission with the basis for:

(1) evaluating the benefits to the general public;

(2) determining the appropriate amount of increased #floor area# to grant; and

(3) determining whether the applicable findings set forth in paragraph (b) of this Section have been met. Such application materials shall also include initial plans for the maintenance of the proposed improvements.

(b) The Commission shall find that:

(1) to the extent practicable, the open or enclosed public concourse will:

(i) consist of a prominent space of generous proportions and quality design that is inviting to the public;

(ii) improve pedestrian circulation and provide suitable amenities for the occupants;

(iii) front upon a #street# or a pedestrian circulation space in close proximity to and within view of, and accessible from, an adjoining sidewalk;

(iv) provide or be surrounded by active #uses#;

(v) be surrounded by transparent materials;

(vi) provide connections to pedestrian circulation spaces in the immediate vicinity; and

(vii) be designed in a manner that combines the separate elements within such space into a cohesive and harmonious site plan, resulting in a high-quality public space;

(2) the public benefit derived from the proposed public concourse merits the amount of additional #floor area# being granted to the proposed #development# or, where permitted, #enlargement#, pursuant to this special permit; and

(3) with regard to a modification to regulations of this Resolution, other than #floor area ratio# regulations, such modification:

(i) is the minimum extent necessary and will facilitate an improved public concourse, inclusive of enhancements described in the findings of paragraph (b)(1) of this Section; and

(ii) will not have adverse effects on the #qualifying site#, surrounding #zoning lots#, or adjacent #streets#.

(c) Prior to obtaining a foundation permit or building permit for a #development# or, where permitted, an #enlargement# on a #qualifying site#, from the Department of Buildings, a written declaration of restrictions, in a form acceptable to the Chairperson of the City Planning Commission, setting forth the obligations of the owner to construct, maintain and provide public access to public improvements provided pursuant to this Section, shall be recorded against such property in the Office of the Register of the City of New York (County of New York). Proof of recordation of the declaration of restrictions shall be submitted in a form

acceptable to the Department of City Planning.

No temporary certificate of occupancy shall be granted by the Department of Buildings for the portion of the #building# utilizing increased #floor area# granted pursuant to the provisions of this Section until the required improvements have been substantially completed, as determined by the Chairperson, and such improvements are usable by the public. Such portion of the #building# utilizing increased #floor area# shall be designated by the Commission in drawings included in the declaration of restrictions filed pursuant to this paragraph.

No permanent certificate of occupancy shall be granted by the Department of Buildings for the portion of the #building# utilizing increased #floor area# until all improvements have been finally completed in accordance with the approved plans, as determined by the Chairperson.

81-65 - Special Floor Area Provisions for All Non-qualifying Sites

LAST AMENDED
10/7/2021

For #non-residential buildings# or #mixed buildings# on #non-qualifying sites# in the East Midtown Subdistrict, the basic maximum #floor area ratios# of the underlying districts shall apply as set forth in this Section. Such basic maximum #floor area ratio# on any #zoning lot# may be increased by bonuses or other #floor area# allowances only in accordance with the provisions of this Chapter, and the maximum #floor area ratio# with such additional #floor area# allowances shall in no event exceed the amount set forth for each underlying district in the following table:

	Grand Central Core Area		Any Other Area	
Means for achieving permitted FAR on a #zoning lot# for all other sites	C5-3 C6-6	C5-2.5 C6-4.5	C5-3 C6-6	C5-2.5 C6-4.5
A. Basic Maximum FAR	15	12	15	12
B. Additional FAR for provision of a #public plaza# (Section 81-651)	--	--	1	1
C. Total as-of-right FAR	15	12	16	13
D. Additional FAR for #mass transit station# improvements (Section 81-652)	3	2.4	3	2.4
E. Maximum FAR of a #landmark or other structure# for transfer purposes (Sections 74-79 and 81-653)	15	12	16	13
F. Maximum amount of transferable development rights from a landmark #zoning lot# that may be utilized on an #adjacent lot# (Sections 74-79 and 81-653)	No limit	2.4	No limit	2.4
G. Maximum FAR permitted on an #adjacent lot#	No limit	14.4	No limit	14.4

81-651 - Floor area bonus for public plazas

LAST AMENDED
8/9/2017

For #non-qualifying sites# in subareas outside the Grand Central Core Area, as shown on Map 2 (East Midtown Subdistrict and Subareas) in Appendix A of this Chapter, the basic maximum #floor area ratio# permitted on such #zoning lots# shall be increased, up to the amount specified in Row B of the table in Section 81-65 (Special Floor Area Provisions for All Non-qualifying Sites), where a #public plaza# is provided in accordance with the provisions of Section 81-23 (Floor Area Bonus for Public Plazas).

81-652 - Floor area bonus for mass transit station improvements

LAST AMENDED
10/7/2021

For #developments# or #enlargements# on #non-qualifying sites# that are #qualifying transit improvement sites#, a #floor area# bonus for #mass transit station# improvements may be granted by the City Planning Commission pursuant to the provisions of Section 66-51 (Additional Floor Area for Mass Transit Station Improvements). For the purposes of this paragraph, defined terms additionally include those in Section 66-11 (Definitions).

81-653 - Special permit for transfer of development rights from landmarks to non-qualifying sites

LAST AMENDED
8/9/2017

For #non-qualifying sites#, the City Planning Commission may permit the transfer of development rights from a #granting lot# to a #receiving lot#, pursuant to the provisions of Section 74-79 (Transfer of Development Rights From Landmark Sites), provided that:

(a) the maximum amount of #floor area# that may be transferred from a #granting lot# shall be the applicable basic maximum #floor area# set forth in Section 81-65 (Special Floor Area Provisions for All Non-qualifying Sites), less the total #floor area# of all existing #buildings# on the landmark #zoning lot#, and any previously transferred #floor area#. In no event shall a #granting lot# transfer any previously granted bonus #floor area# received for subway station improvements, #publicly accessible open areas# or the provision of district improvements pursuant to the provisions of this Chapter, or any preceding regulations;

(b) for each #receiving lot#, the increased #floor area# allowed by the transfer of development rights pursuant to this Section shall not exceed the amount resulting in the maximum #floor area ratio# set forth in Row F of the table in Section 81-65; and

(c) each transfer, once completed, shall irrevocably reduce the amount of #floor area# that may be #developed# or #enlarged# on the #granting lot# by the amount of #floor area# transferred.

81-66 - Special Height and Setback Requirements

LAST AMENDED
8/9/2017

For #buildings# which are #developed# or #enlarged# within the East Midtown Subdistrict, the applicable height and setback regulations of Sections 81-26 (Height and Setback Regulations – Daylight Compensation), inclusive, and 81-27 (Alternate Height and Setback Regulations – Daylight Evaluation), inclusive, are modified by the provisions of this Section, inclusive.

81-661 - Height and setback modifications for buildings in the Grand Central Core Area

LAST AMENDED
8/9/2017

For #buildings# on #non-qualifying sites# within the Grand Central Core Area, as shown on Map 2 (East Midtown Subdistrict and Subareas) in Appendix A of this Chapter, the provisions of Sections 81-26 (Height and Setback Regulations – Daylight Compensation), inclusive, or 81-27 (Alternate Height and Setback Regulations – Daylight Evaluation), inclusive, are modified as follows:

(a) where such #buildings# are governed by Section 81-26, no #compensating recess# shall be required for the #encroachment# of that portion of the #building# below a height of 150 feet, as measured from #curb level#; or

(b) where such #buildings# are governed by Section 81-27, the computation of daylight evaluation shall not include any daylight blockage, daylight credit, profile daylight blockage or available daylight for that portion of the #building# below 150 feet above #curb level#. However, the passing score required pursuant to paragraph (i) of Section 81-274 shall apply.

81-662 - Daylight compensation modifications for qualifying sites

LAST AMENDED
8/9/2017

For #buildings# on #qualifying sites# in the East Midtown Subdistrict using the daylight compensation method of height and setback regulations, the provisions of Section 81-26 (Height and Setback Regulations – Daylight Compensation) are modified as follows:

(a) for the purposes of determining permitted #encroachments# and #compensating recesses# pursuant to Section 81-264 (Encroachments and compensating recesses):

(1) no #compensating recess# shall be required for the #encroachment# of that portion of the #building# below a height of 150 feet, as measured from #curb level#;

(2) #compensating recesses# provided for #encroachments#, or portions thereof, above a height of 400 feet, as measured from #curb level#, need not comply with the provisions of paragraph (c)(1) of Section 81-264. In lieu thereof, for any portion of the #building# located above a height of 400 feet, the amount of #compensating recess# required for any particular level of the #building# shall be equal to the amount of #encroachment# provided at such level. The remaining provisions of paragraph (c) of Section 81-264 shall continue to apply to such #compensating recess#; and

(3) for #buildings# on #qualifying sites# with frontage along the easterly side of Vanderbilt Avenue, the full width of Vanderbilt Avenue may be considered part of the #zoning lot# for the purposes of determining permitted #encroachments# and #compensating recesses#. Such modified #zoning lot# shall be constructed by shifting the westerly boundary of the #zoning lot# to the westerly #street line# of Vanderbilt Avenue, and by prolonging the #street lines# of #narrow streets# to such new westerly boundary. The Vanderbilt Avenue portion of such modified #zoning lot# may be considered a #compensating recess# for encroachments along such #building's# #narrow street# #street frontage zone#, provided that any portion of the #building# fronting along Vanderbilt Avenue above a height of 100 feet, as measured from #curb level#, is set back a minimum 15 feet from the Vanderbilt Avenue #street line#, and further provided that the #street frontage zone# calculation along Park Avenue shall not include Vanderbilt Avenue;

(b) for the purposes of determining the permitted length of #encroachments# pursuant to Section 81-265 (Encroachment limitations by length and height rules) the minimum length of recess required by Formula 2 in paragraph (c) of Section 81-265 shall be modified to 20 percent of the length of the #front lot line#; and

(c) for #buildings# on #qualifying sites# with frontage along Park Avenue, as an alternative to the setback requirements of Table A, B or C in paragraph (b) of Section 81-263 (Standard setback requirements), the Park Avenue wall of such #building# shall be set back behind the applicable #setback line# to the depth of the #setback line# required at that particular height, in accordance with the applicable requirements of the table in this Section.

SETBACK REQUIREMENTS ON STREETS AT LEAST 140 FEET WIDE

Depth of #Setback Line# from #Street Line# at Stated Heights above #Curb Level#.

Height (ft)	Depth of #Setback Line# (ft)
210	0.00
220	1.00
230	2.50
240	4.25
250	5.50
260	7.0
270	8.75
280	10.00
290	11.25
300	12.75
310	14.25
320	15.25
330	16.25
340	17.50
350	18.75
360	19.75
370	21.00
380	21.75
390	23.00

400	23.75
410	25.00
420	25.75
430	26.75
440	27.50
450	28.50
460	29.25
470	29.75
480	30.50
490	31.50
500	32.00
510	33.00
520	33.50
530	34.50
540	35.00
550	35.50
560	36.00
570	37.00
580	37.50
590	38.00
600	38.50

610	39.00
620	39.75
630	40.25
640	41.00
650	41.50
660	41.75
670	42.25
680	43.00
690	43.50
700	43.75
710	44.25
Above 710	For every 10 feet of height above 710 feet, the depth shall increase by one foot

81-663 - Daylight evaluation modifications for qualifying sites

LAST AMENDED
8/9/2017

For #buildings# on #qualifying sites# in the East Midtown Subdistrict using the daylight evaluation method of height and setback regulations, the provisions of Section 81-27 (Alternate Height and Setback Regulations – Daylight Evaluation) are modified as follows:

(a) for the purposes of calculating the daylight evaluation score pursuant to Section 81-274 (Rules for determining the daylight evaluation score):

(1) the computation of daylight evaluation shall not include any daylight blockage for that portion of the #building# above the curved line representing 70 degrees in the applicable #Daylight Evaluation Charts#, and below a height of 150 feet, as measured from #curb level#. However, such computation shall include the daylight blockage created by extending the lines representing the outermost edges of the portion of the #building# immediately above a height of 150 feet downwards to such 70 degree line;

(2) the computation of unblocked daylight squares which are below the curved line representing an elevation of 70 degrees, pursuant to paragraph (c) of Section 81-274, may apply along designated #streets# where #street wall# continuity is required;

(3) the profile penalty for #profile encroachment#, set forth in paragraph (a) of Section 81-274, shall not apply; and

(4) the provisions of paragraph (i) of Section 81-274 shall be modified to require an overall passing score of 66 percent. Notwithstanding such modifications, no single #street# frontage shall have a street score of less than 66 percent;

(b) the reflectivity provisions of Section 81-276 may be utilized to raise both an individual score and the overall score by up to six percentage points;

(c) for #buildings# on #qualifying sites# with frontage along the easterly #street line# of Vanderbilt Avenue, the full width of Vanderbilt Avenue may be considered part of the #zoning lot# for the purposes of constructing the #daylight evaluation chart# pursuant to Section 81-272 (Features of the Daylight Evaluation Chart). Such modified #zoning lot# shall be constructed by shifting the westerly boundary of the #zoning lot# to the westerly #street line# of Vanderbilt Avenue, and by prolonging the # street lines# of #narrow streets# to such new westerly boundary. Such modified #zoning lot# may be utilized to create a modified pedestrian view along Vanderbilt Avenue and intersecting #narrow streets# provided that:

(1) any portion of the #building# fronting along Vanderbilt Avenue above a height of 100 feet, as measured from #curb level#, is set back a minimum of 15 feet from the Vanderbilt Avenue #street line#;

(2) #vantage points# along Vanderbilt Avenue are taken 30 feet west of the westerly #street line# instead of the #center line of the street#; and

(3) #vantage points# along #narrow streets# are taken from the corner of the modified #zoning lot#; and

(d) for #buildings# with frontage along Park Avenue:

(1) for the purposes of establishing #vantage points# along Park Avenue to construct a #daylight evaluation chart# pursuant to the provisions of Section 81-272, the definition of #center line of the street#, as set forth in Section 81-271 (Definitions), shall be modified along Park Avenue to be a line 70 feet from, and parallel to, the Park Avenue #street line# of the #zoning lot#; and

(2) for the purpose of plotting #buildings# on the #daylight evaluation chart# pursuant to Section 81-273 (Rules for plotting buildings on the daylight evaluation chart), Chart 4 (Daylight Evaluation Diagram – Park Avenue) in Appendix B of this Chapter shall be utilized in lieu of the chart for #streets# 100 feet or more in width.

81-67 - Special Mandatory District Plan Element Requirements

LAST AMENDED
8/9/2017

For #buildings# which are #developed# or #enlarged# within the East Midtown Subdistrict, the applicable provisions of Section 81-40 (MANDATORY DISTRICT PLAN ELEMENTS) shall be modified in accordance with the provisions of this Section, inclusive.

81-671 - Special street wall requirements

LAST AMENDED
8/9/2017

The requirements of Section 81-43 (Street Wall Continuity Along Designated Streets) shall be applicable within the Subdistrict, except as modified in this Section.

#Buildings# with frontage on Park, Lexington, Madison and Vanderbilt Avenues, or Depew Place in the Grand Central Core Area, as shown on Map 2 (East Midtown Subdistrict and Subareas) in Appendix A of this Chapter, shall have a #street wall# within 10 feet of the #street line# of such #streets#. On 42nd Street, the #street wall# shall be at the #street line#. The width of the required #street wall# shall be at least 80 percent of the length of the #front lot line#.

The minimum height of such #street walls# without any setback shall be 120 feet above #curb level# or the height of the #building#,

whichever is less, and the maximum height shall not exceed 150 feet above #curb level#. Where a #zoning lot# is bounded by the intersection of Park Avenue, Lexington Avenue, Madison Avenue, Vanderbilt Avenue, 42nd Street or Depew Place and any other #street#, these #street wall# height regulations shall apply along the full length of the #zoning lot# along the other #street# or to a distance of 125 feet from the intersection, whichever is less.

However, for #developments# or, where permitted, #enlargements# on #qualifying sites# within an area bounded by East 43rd Street, Second Avenue, East 42nd Street and a line 200 feet east of Third Avenue, such #street wall# location requirements shall not apply to the portion of the frontage where an open publicly accessible space is provided in accordance with paragraph (b) of Section 81-681 (Mandatory requirements for qualifying sites).

Beyond 125 feet of the intersection, the maximum height of the #street wall# above #curb level# shall not exceed 120 feet. For such #buildings#, the provisions of Section 81-262 (Maximum height of front wall at the street line) shall not be applicable.

However, the ten-foot setback requirement of paragraph (a) of Section 81-263 (Standard setback requirements) shall apply only to those portions of the #building# above 120 feet.

81-672 - Sidewalk widenings

LAST AMENDED
8/9/2017

All sidewalk widenings provided pursuant to the provisions of this Section shall be improved as sidewalks to Department of Transportation standards, shall be at the same level as the adjoining public sidewalks, and shall be accessible to the public at all times. The design provisions set forth in paragraph (f) of Section 37-53 (Design Standards for Pedestrian Circulation Spaces) shall apply, except as modified in this Section. All sidewalk widenings provided in accordance with the provisions of this Section shall constitute pedestrian circulation space, as required pursuant to Section 81-45 (Pedestrian Circulation Space).

(a) Mandatory sidewalk widenings along Madison and Lexington Avenues

#Developments# or, where permitted, #enlargements# on #qualifying sites# with frontage along Madison and Lexington Avenues, shall provide mandatory sidewalk widenings as follows:

(1) where such #zoning lot# occupies the entire #block# frontage, a sidewalk widening shall be provided to the extent necessary so that a minimum sidewalk width of 20 feet is achieved, including portions within and beyond the #zoning lot#. However, no sidewalk widening need exceed 10 feet, as measured perpendicular to the #street line#;

(2) where such #zoning lot# does not occupy the entire #block# frontage, a sidewalk widening shall be provided where all existing #buildings# on the #block# frontage have provided such a widening. Such required widening shall match the amount of widened sidewalk provided on adjacent #zoning lots#, provided that no sidewalk widening need exceed 10 feet, as measured perpendicular to the #street line#.

(b) Permitted sidewalk widenings

Sidewalk widenings may be provided, in accordance with the applicable size and design standards established in Section 37-50 (REQUIREMENTS FOR PEDESTRIAN CIRCULATION SPACE), inclusive:

(1) along #narrow streets# in the Grand Central Subarea, as shown on Map 2 (East Midtown Subdistrict and Subareas) in Appendix A of this Chapter, for #developments# or #enlargements# on #zoning lots# with a #lot width# of 100 feet or more, as measured along the #street line# of such #narrow street#; and

(2) where a #street wall#, or portions thereof, is permitted to be located beyond the #street line# pursuant to the applicable provisions of Section 81-671 (Special street wall requirements).

(c) Permitted obstructions

In the Grand Central Subarea, as shown on Map 2, awnings and canopies shall be permitted obstructions within a sidewalk widening provided that no structural posts or supports are located within any portion of the sidewalk or such widening.

81-673 - Mass transit access

LAST AMENDED
8/9/2017

(a) On #qualifying sites#

Where a #zoning lot# contains an easement volume for pedestrian access to a subway station or rail mass transit facility and such #zoning lot# is proposed to be #developed# or, where permitted, #enlarged# in accordance with the provisions for #qualifying sites#, such existing easement volume shall be preserved, or reconfigured in accordance with standards and terms approved by the Metropolitan Transportation Authority (MTA), as part of such #development# or #enlargement#. Any reconfiguration shall be constructed by the owner of the #development# or #enlargement#.

For such #developments# or, where permitted, #enlargements#, the owner shall submit a site plan showing a proposed location and size of the transit easement volume that would provide access between the #street# and the below-grade subway station or rail mass transit facility and be compatible with the proposed #development# or #enlargement# on the #zoning lot# for joint approval and final certification by the MTA and the Chairperson of the City Planning Commission. The MTA and the Chairperson shall comment on such site plan within 45 days of its receipt and may, within such 45-day period or following its expiration, permit the granting of an excavation permit while the location and size of the transit easement volume is being finalized. Upon joint approval of a site plan by the MTA and the Chairperson, copies of such certification shall be forwarded by the Chairperson to the Department of Buildings.

Legal instruments creating a transit easement volume shall be executed and recorded in a form acceptable to the City. The execution and recording of such instruments shall be a precondition to the issuance of any foundation permit, new building permit, or alteration permit by the Department of Buildings allowing such #development# or #enlargement#.

(b) On #qualifying sites# in the Grand Central Transit Improvement Zone Subarea or in the Other Transit Improvement Zone Subarea

For #developments# or, where permitted, #enlargements# involving ground floor level construction on #qualifying sites# in the Grand Central Transit Improvement Zone Subarea, or in the Other Transit Improvement Zone Subarea, as shown on Map 2 (East Midtown Subdistrict and Subareas) in Appendix A of this Chapter, in addition to the provisions of paragraph (a) of this Section, as applicable, a transit easement volume may be required on such #zoning lot# for public access between the #street# and a below-grade subway station or rail mass transit facility.

Prior to filing any applications with the Department of Buildings for an excavation permit, foundation permit, new building permit or alteration permit for a #development# or #enlargement#, the owner of the #zoning lot# shall file an application with the MTA and the Chairperson requesting a certification as to whether or not a transit easement volume is required on the #zoning lot#.

Within 60 days of receipt of such application, the MTA and the Chairperson shall jointly certify whether or not a transit easement volume is required on the #zoning lot#. Failure to certify within the 60-day period will release the owner from any obligation to provide a transit easement volume on such #zoning lot#.

When the MTA and the Chairperson indicate that a transit easement volume is required, the owner shall submit a site plan showing a proposed location and size of the transit easement volume that would provide access between the #street# and the below-grade subway station or rail mass transit facility and be compatible with the proposed #development# or #enlargement# on the #zoning lot# for joint approval and final certification by the MTA and the Chairperson. The MTA and the Chairperson shall comment on such site plan within 45 days of its receipt and may, within such 45-day period or following its expiration, permit the granting of an excavation permit while the location and size of the transit easement volume is being finalized. Upon joint approval

of a site plan by the MTA and the Chairperson, copies of such certification shall be forwarded by the Chairperson to the Department of Buildings.

Legal instruments creating a transit easement volume shall be executed and recorded in a form acceptable to the City. The execution and recording of such instruments shall be a precondition to the issuance of any foundation permit, new building permit, or alteration permit by the Department of Buildings allowing such #development# or #enlargement#.

If a transit easement volume is required on the #zoning lot#, pursuant to the provisions of this Section, an off-street subway or rail mass transit access improvement may be constructed and maintained by either the owner of the #development# or #enlargement#, or the MTA, as follows:

(1) where such mass transit access improvement is constructed and maintained by the owner of the #development# or #enlargement#:

(i) such mass transit access shall be improved to the standards set forth in Section 81-48 and shall be approved by the MTA, and shall comply with the following:

(a) where the lobby of the #building# adjoins such mass transit access, in addition to mass transit access to the #street#, such mass transit access shall provide a direct connection to the lobby of the #building# that is open during normal business hours; and

(b) such mass transit access shall provide directional #signs# in accordance with the provisions of Section 81-412 (Directional signs). Such #signs# shall be exempt from the maximum #surface area# of non-#illuminated signs# permitted by Section 32-642 (Non-illuminated signs); and

(ii) no temporary certificate of occupancy shall be granted by the Department of Buildings for the #building# until the Chairperson of the City Planning Commission, acting in consultation with the MTA, has certified that the improvements are substantially complete and usable by the public.

(2) where such mass transit access improvement is constructed and maintained by the MTA:

(i) where construction of the transit easement volume by the MTA is not contemporaneous with the construction of the #development#:

(a) any underground walls constructed along the #front lot line# of a #zoning lot# shall contain a knockout panel, not less than 12 feet wide, below #curb level# down to the bottom of the easement. The actual location and size of such knockout panel shall be determined through consultation with the MTA; and

(b) temporary construction access shall be granted to the MTA on portions of the #zoning lot# outside of the transit easement volume, as necessary, to enable construction within and connection to the transit easement volume; and

(ii) in the event that the MTA has approved of obstructions associated with the #development# or #enlargement# within the transit easement volume, such as building columns or footings, such construction and maintenance shall exclude any such obstructions within the transit easement volume.

(c) In other locations

For portions of the #Special Midtown District# within the #Special Transit Land Use District#, where, as part of a #development# or #enlargement# involving ground floor level construction, a transit easement volume is required by the MTA to accommodate, whether singly or in any combination, light wells, stairs, ramps, escalators, elevators, passageways, or ancillary facilities required to support the functioning of subway station or rail mass transit facilities, including, but not limited to, emergency egress or ventilation structures, the MTA shall, in consultation with the owner of the #zoning lot# and the City Planning Commission, determine the appropriate type of transit easement and reasonable dimensions for such transit easement volume.

The floor space occupied by any transit easement volume required pursuant to this Section shall not count as #floor area#. Where access

improvements are constructed by the owner of the #zoning lot#, each square foot of mass transit access may constitute three square feet of pedestrian circulation space required pursuant to Section 81-45 (Pedestrian Circulation Space), not to exceed 3,000 square feet.

81-674 - Ground floor use provisions

LAST AMENDED
8/9/2017

(a) Within the Vanderbilt Corridor Subarea

For #buildings# #developed# or #enlarged# on the ground floor on #zoning lots# located within the Vanderbilt Corridor Subarea, as shown on Map 2 (East Midtown Subdistrict and Subareas) in Appendix A of this Chapter, where a #building# fronts upon a designated retail #street#, as shown on Map 3 (Retail and Street Wall Continuity), any portion of such #building's# ground floor level frontage along such designated retail #street# allocated to above- or below-grade public realm improvements provided in accordance with a special permit pursuant to Section 81-632 (Special permit for transfer of development rights from landmarks to the Vanderbilt Corridor Subarea) or Section 81-633 (Special permit for Grand Central public realm improvements) shall be excluded from the retail continuity requirements of Section 81-42 (Retail Continuity Along Designated Streets).

(b) Within the Grand Central Core Area

For #buildings# #developed# or #enlarged# on the ground floor after August 26, 1992, in the Grand Central Core Area, as shown on Map 2, #building# lobby entrances shall be required on each #street# frontage of the #zoning lot# where such #street# frontage is greater than 75 feet in length, except that if a #zoning lot# has frontage on more than two #streets#, #building# entrances shall be required only on two #street# frontages. Each required #building# entrance shall lead directly to the #building# lobby. #Buildings# #developed# from May 13, 1982, to August 25, 1992, shall be subject to the provisions of Section 81-47 (Major Building Entrances).

Required #building# entrances on opposite #street# frontages shall be connected directly to the #building# lobby by providing a through #block# connection in accordance with paragraph (h) of Section 37-53 (Design Standards for Pedestrian Circulation Spaces), except that such through #block# connection shall be located at least 50 feet from the nearest north/south #wide street#.

Each required #building# entrance shall include a #building# entrance recess area, as defined in paragraph (b) of Section 37-53, except that for #developments# or #enlargements# with frontage on Madison Avenue, Lexington Avenue or 42nd Street, the width of a #building# entrance recess area shall not be greater than 40 feet parallel to the #street line# and there may be only one #building# entrance recess area on each such #street# frontage.

(c) Along #narrow streets# of #qualifying sites# in the Grand Central Core Area

For #buildings# #developed# or, where permitted, #enlarged# on the ground floor on #qualifying sites# in the Grand Central Core Area, as shown on Map 2, a minimum of 50 percent of a #building's# ground floor level #street wall# frontage along a #narrow street# shall be limited to retail, personal service or amusement #uses# permitted by the underlying zoning district regulations, but not including #uses# in Use Groups 6B, 6E, 7C, 7D, 8C, 8D, 9B, 10B, 11 and 12D or automobile showrooms or plumbing, heating or ventilating equipment showrooms. Such ground floor level retail, personal services or amusement #uses# shall comply with the transparency provisions of Section 81-42.

81-675 - Curb cut restrictions and loading berth requirements

LAST AMENDED
8/9/2017

For #developments# or #enlargements# within the Grand Central Core Area, as shown on Map 2 (East Midtown Subdistrict and Subareas) in Appendix A of this Chapter, in addition to the provisions of Sections 81-30 (OFF-STREET PARKING AND OFF-STREET LOADING REGULATIONS), inclusive, and 81-44 (Curb Cut Restrictions), the following shall apply:

(a) Loading berth provisions

For #through lots#, the required loading berth shall be arranged so as to permit head-in and head-out truck movements to and from the #zoning lot#.

However, the Commissioner of Buildings may waive such head-in and head-out requirements, provided that:

(1) the #zoning lot# has frontage along a #street# where curb cuts accessing a loading berth are permitted, but there is no access to such #zoning lot# from the #street# due to the presence of:

(i) a #building# existing on August 9, 2017, containing #residences#;

(ii) a #non-residential building# existing on August 9, 2017, that is three or more #stories# in height; or

(iii) a #building# designated as a landmark or considered a contributing #building# in an Historic District designated by the Landmarks Preservation Commission; or

(2) there are subsurface conditions, ventilation requirements from below-grade infrastructure or other site planning constraints that would make accommodating such loading berths infeasible.

(b) Curb cut provisions

The maximum width of any curb cut (including splays) shall be 15 feet for one-way traffic and 25 feet for two-way traffic. Curb cuts shall not be permitted on 47th Street between Park and Madison Avenues or on 45th Street between Depew Place and Madison Avenue.

81-676 - Pedestrian circulation space requirements

LAST AMENDED
8/9/2017

Any #development# or #enlargement# within the Grand Central Core Area, as shown on Map 2 (East Midtown Subdistrict and Subareas) in Appendix A of this Chapter, shall be subject to the provisions of Sections 81-45 (Pedestrian Circulation Space), 81-46 (Off-street Relocation or Renovation of a Subway Stair) and 81-48 (Off-street Improvement of Access to Rail Mass Transit Facility), except that:

(a) no arcade shall be allowed;

(b) a sidewalk widening may be provided only for a #building# occupying an Avenue frontage, provided that such sidewalk widening extends for the length of the full #block# front; and

(c) for #developments# or #enlargements# on #zoning lots# located within the Vanderbilt Corridor Subarea, as shown on Map 2, up to a maximum of 3,000 square feet of on-site improvements to the public realm provided in accordance with a special permit pursuant to Section 81-632 (Special permit for transfer of developments rights from landmarks to the Vanderbilt Corridor Subarea) or Section 81-633 (Special permit for Grand Central public realm improvements) may be applied toward the pedestrian circulation space requirement.

81-68 - Additional Provisions for Qualifying Sites

LAST AMENDED
8/9/2017

81-681 - Mandatory requirements for qualifying sites

LAST AMENDED
5/8/2019

(a) Building energy design requirements for #buildings# on #qualifying sites#

To ensure advancement of goals for the reduction of greenhouse gas emissions, #buildings# on #qualifying sites# shall either:

(1) utilize a district steam system for the #building's# heating and hot water systems; or

(2) the core and shell of such #building# shall exceed the standards of the chosen commercial building energy-efficiency compliance path within the 2016 New York City Energy Conservation Code (NYCECC), by three percent.

Compliance with the provisions of this Section shall be demonstrated to the Department of Buildings at the time of issuance of a new building permit for a #development# or, where permitted, an #enlargement# on a #qualifying site#.

The City Planning Commission may, by rule, modify the standards of this Section, as necessary, to ensure that the environmental standards established herein, meet or exceed the current best practices in reducing greenhouse gas emissions.

(b) Mandatory publicly accessible space requirements for qualifying sites

A #qualifying site# shall provide a publicly accessible space, open or enclosed, as defined herein, in accordance with the size provisions of paragraph (b)(1) of this Section and the design requirements of paragraph (b)(2). Each publicly accessible space shall require a certification by the Chairperson of the City Planning Commission, pursuant to Section 37-78 (Compliance), as modified herein.

For the purposes of this Chapter on a #qualifying site#, a "publicly accessible space" shall be defined as an open or enclosed area provided for public use and enjoyment on the #zoning lot#. An "open publicly accessible space" shall be defined as a publicly accessible space, that is open to the sky on a #qualifying site#, and an "enclosed publicly accessible space" shall be defined as a fully enclosed, climate-controlled publicly accessible space on a #qualifying site#. The design standards contained in paragraph (b)(2)(ii) of this Section for an enclosed publicly accessible space are intended to serve the same purposes outlined for #public plazas# in Section 37-70.

(1) Type and minimum size

(i) A #qualifying site# with a #lot area# of at least 30,000 square feet but less than 45,000 square feet shall provide a publicly accessible space, open or enclosed, with an area of not less than 10 percent of the #lot area# of the #zoning lot#.

(ii) A #qualifying site# with a #lot area# of 45,000 square feet but less than 65,000 square feet shall provide an open publicly accessible space with an area of not less than 10 percent of the #lot area# of the #zoning lot#, except that where the provisions of Sections 81-40 (MANDATORY DISTRICT PLAN ELEMENTS), inclusive, and 81-67 (Special Mandatory District Plan Element Requirements), inclusive, are applicable to the #qualifying site# and preclude an open publicly accessible space from being provided on the #qualifying site#, an enclosed publicly accessible space shall be provided in the proposed #building#.

In addition to complying with paragraphs (a) through (d) of Section 37-78, each application for an enclosed publicly accessible space shall demonstrate which of the applicable provisions of Sections 81-40 and 81-67, inclusive, conflict with the design requirements set forth in 37-70, inclusive, and that they necessitate the provision of the enclosed publicly accessible space in lieu of an open publicly accessible space.

(iii) A #qualifying site# with a #lot area# of 65,000 square feet or greater shall provide an open publicly accessible space with an area of not less than 10,000 square feet. Where such #qualifying site# has a #through lot# portion, such #qualifying site# shall provide an open publicly accessible space across the #through lot# portion.

However, for a #qualifying site# with a #lot area# of 80,000 square feet or greater that includes an existing entrance to a rail mass-transit facility located outside the #through lot# portion of the #zoning lot# existing on May 8, 2019, such open publicly accessible space may be located so as to include the entrance to a rail mass-transit facility, provided that such open publicly accessible space adjoins a #street# or a required sidewalk widening, as applicable.

(2) Design requirements for publicly accessible spaces

(i) Open publicly accessible space

For open publicly accessible space, the provisions of Section 37-70, inclusive, shall apply, except that the provisions of Section 37-713 (Locational restrictions) shall not apply. In addition, the following modifications or waivers may be applied under certain circumstances:

(a) For #qualifying sites# where an open publicly accessible space is permitted to adjoin a #street# or a required sidewalk widening to accommodate an entrance to a rail mass-transit facility in accordance with paragraph (b)(1)(iii) of this Section, and the majority of the subsurface area of such #qualifying site# is occupied by a railroad right-of-way, thus imposing practical difficulty in configuring the #building# or required publicly accessible space:

(1) the provisions of Sections 81-42 (Retail Continuity Along Designated Streets), 81-43 (Street Wall Continuity Along Designated Streets) and 81-671 (Special street wall requirements), paragraph (d) of Section 37-715 (Requirements for major portions of public plazas) need not apply;

(2) where #street wall# requirements are not applied, the provisions of paragraphs (a) and (b) of Section 37-726 (Permitted obstructions) may be modified to allow a portion of an open publicly accessible space to be covered by a #building or other structure#, provided that there is an average separation of at least 50 feet between the level of such open publicly accessible space and any portion of #building# above, and further provided that any such portion shall be located no lower than 40 feet above the level of such open publicly accessible space. In addition, such #building or other structure# shall not obstruct more than 60 percent of the area of such open publicly accessible space;

(3) the provisions of paragraphs (a) and (c) of Section 37-76 (Mandatory Allocation of Frontages for Permitted Uses) need not apply, where at least one food service kiosk shall abut or be included within such open publicly accessible space. The size limitations of paragraph (a), and the certification requirements of paragraph (c) of Section 37-73 shall not apply to such kiosk; and

(4) where the provisions of paragraph (d) of Section 37-715 are not applied, the provisions of paragraph (a) of Section 37-721 (Sidewalk frontage) may be modified to require no more than 40 percent of the area within 15 feet of any such #street line# to be free of obstructions and the provisions of Section 37-741 (Seating), may be modified to exclude the length of any such #street line# from the calculation of the amount of seating required within 15 feet of such #street line#.

(b) For #qualifying sites# where an open publicly accessible space is permitted to adjoin a #street# or a required sidewalk widening to accommodate an entrance to a rail mass-transit facility in accordance with paragraph (b)(1)(iii) of this Section, the Chairperson of the City Planning Commission shall permit modifications to the remaining design provisions of Section 37-70, inclusive, upon certification to the Department of Buildings that such modifications are limited to those that directly address practical difficulties resulting from the presence of the entrance to a rail mass-transit facility within the open publicly accessible space. Any application shall include materials demonstrating the extent of modifications necessary. The Chairperson, in consultation with the Metropolitan Transportation Authority, shall determine the appropriate amount of above-grade pedestrian circulation space into and around the entrance to such rail mass-transit facility.

(ii) Enclosed publicly accessible space

For enclosed publicly accessible spaces, the following shall apply:

(a) An enclosed publicly accessible space shall have a minimum height of 30 feet or the height of the ground floor level, whichever is greater, and a minimum width and depth, at any point, of 30 feet. Such enclosed

publicly accessible space shall be located on the ground floor level of the #building# and shall be directly accessible from an adjoining #street# or #publicly accessible open area# that the area fronts. A minimum of one entrance to the enclosed publicly accessible space shall be provided from the adjoining #street# on which it fronts; however, if it fronts on more than one #street#, such entrance shall be from the #street# with the longer frontage. The aggregate width of doorways accessing such enclosed publicly accessible space shall not be less than 10 feet in width.

(b) All ground floor level #street walls# enclosing the enclosed publicly accessible space shall be treated with clear, untinted, transparent materials. Such transparent materials shall occupy at least 70 percent of the surface area of such ground floor level #street wall# between a height of two feet and 30 feet, or the height of the ground floor ceiling, whichever is higher, as measured from the adjoining sidewalk. Such enclosed publicly accessible space shall be heated or air-conditioned, and the standards for heating, ventilating and air-conditioning shall be at least equal to those of the lobby for the principal #use# of the #building#.

(c) Public access to the enclosed publicly accessible space shall be provided, at a minimum, from 7:00 a.m. to 10:00 p.m. However, if a cafe or kiosk, pursuant to Section 37-73 (Kiosks and Open Air Cafes), is provided within, such enclosed publicly accessible space shall remain open to the public during the hours of operation of the cafe or kiosk, if such hours are longer than otherwise required by this Section.

The hours of access shall be included on all required entry plaques and information plaques in accordance with the provisions of Section 37-751 (Public space signage systems) and for through #block# enclosed publicly accessible spaces, an information plaque shall be provided in accordance with paragraph (h)(2)(viii) of Section 37-53 (Design standards for Pedestrian Circulation Spaces).

(d) The provisions of Sections 37-718 (Paving), 37-722 (Level of plaza), 37-728 (Standards of accessibility for persons with disabilities), 37-744 (Litter receptacles), 37-745 (Bicycle parking), 37-746 (Drinking fountains), 37-748 (Additional amenities), 37-752 (Prohibition signs), 37-753 (Accessory signs) and 37-77 (Maintenance) shall apply to enclosed publicly accessible spaces.

(e) The provisions of Section 37-723 (Circulation paths) shall apply to enclosed publicly accessible spaces. In addition, for enclosed publicly accessible spaces provided in conjunction with subway entrances and/or designed to provide connection to above- and/or below-grade improvements, an unobstructed pedestrian circulation path shall be provided from at least one entrance of the enclosed publicly accessible space to such subway entrance and to such above- and/or below-grade improvements.

(f) The provisions of paragraphs (a) and (b) of Section 37-726 (Permitted obstructions) shall apply to enclosed publicly accessible spaces and are modified as follows:

(1) structural columns shall be considered permitted obstructions. The area occupied by such structural columns shall be excluded from the area calculations for the enclosed publicly accessible space. In addition, interior structural columns shall have an aggregate area of no more than two percent of the total enclosed publicly accessible space. Such columns shall not be considered permitted obstructions in any circulation path; and

(2) a cafe or kiosk permitted by certification pursuant to Section 37-73 (Kiosks and Open Air Cafes) shall be considered a permitted obstruction within an enclosed publicly accessible space and may not occupy more than 20 percent of the enclosed publicly accessible space.

(g) The provisions of Section 37-741 for seating shall apply to enclosed publicly accessible spaces, except that such provisions are modified as follows:

(1) the requirements of seating within 15 feet of a #street line# shall not apply;

(2) all of the linear seating capacity may be in moveable seats. All such moveable seats must remain in the enclosed publicly accessible space during the hours of operation; and

(3) the requirement that seats facing walls be located a minimum of six feet from such wall shall only apply to fixed seating.

(h) The requirements of Section 37-742 for planting and trees shall apply to enclosed publicly accessible spaces, except that the surface area of any vertical planting may be included in the calculation of the total area of planting beds that are provided, and trees shall not be required.

(i) All enclosed publicly accessible spaces shall be illuminated with a minimum level of illumination of not less than five horizontal foot candles (lumens per foot) throughout the space. The requirements of Section 37-743 for a lighting schedule, a diagram of light level distribution and electrical power shall apply.

(j) At least 50 percent of the total frontage of all #building# walls fronting on an enclosed publicly accessible space, excluding such frontage occupied by #street walls#, #building# lobbies or #building# walls #abutting# #lot lines#, shall be limited to retail, personal service or amusement #uses# permitted by the underlying zoning district regulations, but not including #uses# in Use Groups 6B, 6E, 7C, 7D, 8C, 8D, 9B, 10B, 11 and 12D or banks, automobile showrooms or plumbing, heating or ventilating equipment showrooms. For such #building# walls, the transparency provisions of paragraph (c) of Section 37-76 shall apply.

(k) The area of the enclosed publicly accessible space shall be exempt from calculations for #floor area# as defined in Section 12-10 (DEFINITIONS).

In addition, a maximum of 30 percent of the area of the publicly accessible space, whether open or enclosed, may be counted towards meeting the pedestrian circulation space requirement, up to a maximum of 3,000 square feet.

81-682 - Priority Improvement List for qualifying sites

LAST AMENDED
8/9/2017

In accordance with the provisions of Section 81-641 (Additional floor area for transit improvements on qualifying sites), any applicant for a #development# or #enlargement# on a #qualifying site# in the Grand Central Transit Improvement Zone Subarea, or the Other Transit Improvement Zone Subarea, shall select a transit improvement, or combination thereof, to be completed in accordance with the provisions of this Section.

(a) Selecting an Improvement

An applicant shall select a transit improvement from the Priority Improvement List in paragraph (b) of this Section based on the #floor area# such improvement generates relative to the minimum #floor area# required and maximum #floor area# permitted for completion of such improvement pursuant to Section 81-641, and based on the following geographical and technical considerations:

(1) First, the applicant shall select a transit improvement in the same Subarea of the East Midtown Subdistrict as the proposed #development# or #enlargement# on a #qualifying site#;

(2) If none of the transit improvements on the Priority Improvement List meet the criteria of paragraph (a)(1) of this Section, the applicant shall select a transit improvement on a transit route that passes through, and has stations or other facilities in the same Subarea of the East Midtown Subdistrict as the proposed #development# or #enlargement# on a #qualifying site#;

(3) If none of the transit improvements on the Priority Improvement List meet the criteria of paragraphs (a)(1) or (a)(2) of this Section, the applicant shall select from any remaining improvement on the list.

In addition, applicants shall consult with the applicable City or State agencies with jurisdiction over and control of the proposed improvement to ensure that the selected improvement will meet the operational and long-term planning needs of the station or

transit route, including any phasing requirements, and compliance with the Americans with Disabilities Act (ADA).

(b) The Priority Improvement List

The Priority Improvement List (the "Improvement List"), set forth in the tables below, details physical improvements to subway stations and other rail mass transit facilities in, or adjacent to, the East Midtown Subdistrict, that an applicant for a #development# or, where permitted, an #enlargement# on a #qualifying site# may complete to obtain additional #floor area#.

Three levels of improvements are available for completion, which, accordingly, generate three different amounts of additional #floor area#:

(1) Type 1 Improvements generate 40,000 square feet of #floor area#, and include new or expanded on-street station entrances, new or expanded off-street station entrances, new or expanded accessible routes for persons with physical disabilities between two levels of a station, and four or fewer new or reconfigured station stairs.

(2) Type 2 Improvements generate 80,000 square feet of #floor area#, and include new or expanded station escalators, new or expanded accessible routes for persons with physical disabilities between three or more station levels, new or expanded paid areas of a station, including widened platforms or mezzanine levels, and more than four new or reconfigured station stairs.

(3) Type 3 Improvements generate 120,000 square feet of #floor area#, and include large-scale renovations that significantly improve the environment of stations, and new connections between two or more stations.

In consultation with the Metropolitan Transportation Authority, the City Planning Commission may, by rule, modify the Improvement List to reflect new improvements needed in the transit network.

PRIORITY IMPROVEMENT LIST

TYPE 1 IMPROVEMENTS		
Location	Type of Improvement	Transit Line
Lexington Avenue/ 53rd – 51st Street station	Replace escalator and stair connecting downtown Lexington platform to underpass with widened stair	Lexington Avenue Line/53rd Street Line
Lexington Avenue/ 53rd – 51st Street station	Provide new street entrance to uptown Lexington platform from 50th Street	Lexington Avenue Line/53rd Street Line
42 St - Bryant Park /5th Ave station	Provide ADA elevator between Flushing platform and mezzanine level	Flushing Line/6th Avenue Line
42 St - Bryant Park /5th Ave station	Provide new street entrance from north side of West 42nd street	Flushing Line/6th Avenue Line

42 St - Bryant Park /5th Ave station	Provide ADA elevator between Sixth Avenue northbound platform and mezzanine level	Flushing Line/6th Avenue Line
42 St - Bryant Park /5th Ave station	Provide ADA elevator between Sixth Avenue southbound platform and mezzanine level	Flushing Line/6th Avenue Line
Lexington Av - 59th Street station	Provide new street stair capacity at northeast and northwest corners of East 60th Street and Lexington Avenue	Lexington Avenue Line/Broadway-60th Street Line
Lexington Av - 59th Street station	Provide ADA elevator between local IRT platform and street level	Lexington Avenue Line/Broadway-60th Street Line
Lexington Av - 59th Street station	Provide ADA elevator between 60th Street (BMT) line platform and mezzanine level	Lexington Avenue Line/Broadway-60th Street Line
Lexington Av - 59th Street station	Provide new platform stair and widen existing stairs between 60th Street (BMT) line platform and mezzanine level	Lexington Avenue Line/Broadway-60th Street Line
Fifth Avenue/53rd Street station	Provide new street entrance on East 53rd Street west of Madison Avenue	53rd Street Line
Grand Central/42nd Street station	Widen platform stair at east end of Flushing platform	Flushing Line
Grand Central/42nd Street station	Widen two stairs between uptown Lexington platform and Flushing and Lexington platforms	Flushing Line
TYPE 2 IMPROVEMENTS		
Location	Type of Improvement	Transit Line
Lexington Avenue/ 53rd–51st Street station	Provide widened escalator between 53rd Street platform and mezzanine	Lexington Avenue Line/53rd Street Line

Lexington Av-59th Street station	Provide ADA elevator between northbound local Lexington Avenue Line platform, northbound express Lexington Ave Line platform, and the 60th Street (BMT) line mezzanine	Lexington Avenue Line/Broadway-60th Street Line
Lexington Av-59th Street station	Provide ADA elevator between southbound local Lexington Avenue Line platform, southbound express Lexington Avenue Line platform, and the 60th Street (BMT) line mezzanine	Lexington Avenue Line/Broadway-60th Street Line
47th/50th Streets Rockefeller Ctr station	Provide two new platform stairs and widen seven platform stairs	6th Avenue Line
Fifth Av/53rd Street station	Provide a new stair from mezzanine level to upper platform, and a new stair from upper platform to lower platform	53rd Street Line
Fifth Av/53rd Street station	Provide ADA elevator from mezzanine to upper platform, and to lower platform	53rd Street Line
Fifth Av/53rd Street station	Provide two escalators from mezzanine to upper platform	53rd Street Line
Fifth Av/53rd Street station	Provide new mezzanine area under East 53rd Street with fare control to accommodate street entrance and new access core	53rd Street Line
Fifth Av/53rd Street station	Provide new access core between platforms and street level to accommodate escalators, elevator, and stairs	53rd Street Line
Grand Central/42nd Street station	Provide new Flushing platform stair and expand transfer passageway to accommodate the addition of the stair	Flushing Line
TYPE 3 IMPROVEMENTS		

Location	Type of Improvement	Transit Line
Grand Central/42nd Street station	Renovate to contemporary standards the south end of the Grand Central Lexington Subway mezzanine from the Shuttle Passageway and 125 Park Avenue entrances to join the renovated areas on the north end of the mezzanine	Flushing Line/Lexington Avenue Line

81-683 - Criteria for improvements in the Public Realm Improvement Concept Plan

LAST AMENDED
8/9/2017

The #Public Realm Improvement Fund Governing Group# shall select priority improvements for the Public Realm Improvement Concept Plan (the "Concept Plan") in accordance with the provisions of this Section.

All improvements in the Concept Plan, which may be funded through contributions to the #Public Realm Improvement Fund#, shall:

(a) be within the East Midtown Subdistrict, a location immediately adjacent thereto, or in a subway or rail mass transit facility in the Borough of Manhattan which has significant ridership into and out of the Subdistrict;

(b) have a City or State agency as a project sponsor;

(c) meet the definition of a capital project under Section 210 of the New York City Charter; and

(d) consist of either:

(1) above-grade public realm improvements, including, but not limited to, pedestrian plazas that provide opportunities for passive recreation, or improvements along a street accommodating both vehicular and pedestrian access that may include pedestrian amenities, or streetscape, sidewalk, crosswalk and median enhancements; or

(2) below-grade public realm improvements, including, but not limited to widening, straightening, expanding or otherwise enhancing the existing below-grade pedestrian circulation network, additional vertical circulation, reconfiguring circulation routes to provide more direct pedestrian connections to subway or rail mass transit facilities, improved or new disabled access, or providing daylight access, or enhancements to noise abatement, air quality, lighting, finishes or rider orientation in new or existing passageways, within the East Midtown Subdistrict, a location immediately adjacent thereto, or in a subway or rail mass transit facility identified on the Priority Improvement List in Section 81-682 (Priority Improvement List for qualifying sites).

The Governing Group shall first consider the funding of the public realm improvements set forth in the table in this Section prior to consideration and selection of other above- or below-grade public realm improvements.

PUBLIC REALM IMPROVEMENTS

PEDESTRIAN PLAZAS

Pershing Square East
East side of Park Avenue between East 40th Street and East 41st Street
West side of Park Avenue between East 40th Street and East 41st Street
SHARED STREETS
East 41st Street between 5th Avenue and Lexington Avenue
Vanderbilt Avenue between East 43rd Street and East 47th Street
East 43rd Street between Lexington Avenue and 3rd Avenue
East 44th Street between Lexington Avenue and 3rd Avenue
MEDIAN WIDENINGS
Expansion of Park Avenue medians between East 46th Street and East 57th Street
THOROUGHFARE IMPROVEMENTS
Five blocks of East 53rd Street between 2nd Avenue and 5th Avenue

81-684 - Authorization for qualifying sites

LAST AMENDED
8/9/2017

(a) Authorization to allow enlargements on qualifying sites

In conjunction with any application that would allow additional #floor area# permitted beyond the basic maximum #floor area# for a #qualifying site# set forth in Section 81-64 (Special Floor Area Provisions for Qualifying Sites), the City Planning Commission may authorize modifications to the requirement in the definition of #qualifying site# in Section 81-613 to allow #enlargements# on #qualifying sites# to an existing #building# with frontage along a #wide street#. The Commission may also waive the requirement that such #qualifying site# provide publicly accessible space in accordance with the provisions of paragraph (b) of Section 81-681 (Mandatory requirements for qualifying sites). In order to permit such modifications, the Commission shall find that such #enlargement# includes significant renovations to the existing #building# that will bring it up to contemporary space standards.

Where the existing #building# includes #non-complying# #floor area#, a contribution shall be deposited by the applicant into the #Public Realm Improvement Fund#. Such contribution shall be an amount equal to 20 percent of the #Public Realm Improvement Fund Development Rights Valuation# multiplied by the amount of such pre-existing #non-complying# #floor area#. For the purposes of such calculation, the amount of existing #non-complying# #floor area# shall not include any bonus #floor area# associated with a #publicly accessible open area# to remain on the #zoning lot#. The payment of the non-refundable

contribution to the #Public Realm Improvement Fund#, shall be a precondition to the issuance of any foundation permit or new building permit by the Department of Buildings allowing the #enlargement# on a #qualifying site#.

For such #enlargements# to #buildings# with #non-complying# #floor area#, the proposed #floor area# beyond the amount contained in the pre-existing #non-complying# #building# shall be obtained by utilizing the applicable provisions of Section 81-64. For the purposes of applying the provisions of such Section, the reconstructed #floor area ratio# shall be considered the basic maximum #floor area ratio#. However, the maximum #floor area ratios# of Row E and Row H shall continue to apply.

However, an alteration of an existing #building# resulting in both the removal of more than 75 percent of the #floor area# and more than 25 percent of the perimeter walls of such existing #building#, and the replacement of any amount of #floor area#, shall be considered a #development#.

Applications for authorizations shall be referred to the affected Community Board for a period of at least 30 days for comment. The Commission shall grant, in whole or in part, or deny the application within 60 days of the completion of the Community Board review period.

The Commission may prescribe appropriate conditions and safeguards to minimize adverse effects on the character of the surrounding area.

(b) Authorization for a #qualifying site# providing publicly accessible space

In conjunction with any application that would allow additional #floor area# permitted beyond the basic maximum #floor area# on a #qualifying site# set forth in Section 81-64 and providing publicly accessible space, open or enclosed, pursuant to paragraph (b) of Section 81-681, the Commission may authorize the waiver of the #street wall# regulations of Sections 81-43 (Street Wall Continuity Along Designated Retail Streets) and 81-671 (Special street wall requirements), requirements of Sections 81-42 (Retail Continuity Along Designated Streets) and 81-674 (Ground floor use provisions), the curb cut location restriction of paragraph (b) of Section 81-675 (Curb cut restrictions and loading berth requirements), and the design requirements for publicly accessible space, open or enclosed, set forth in paragraph (b)(2) of Section 81-681.

In order to grant such authorization, the Commission shall find that such proposed waivers will result in a superior urban design relationship with surrounding #streets#, #buildings#, and other open areas, and;

(1) for waiver of #street wall# regulations:

(i) such waiver is necessary due to constraints or conditions of the configuration of the site; and

(ii) such waiver will not unduly obstruct the access to light and air of surrounding #buildings# and open spaces;

(2) for waivers of retail continuity and ground floor #use# provisions, such waivers are minimized by a site plan that requires pedestrian-oriented #uses# along the boundaries of any publicly accessible space, open or enclosed;

(3) for waiver of the curb cut location restriction of paragraph (b) of Section 81-675, for a #qualifying site# on 47th Street between Park Avenue and Vanderbilt Avenue, that the proposed curb cut location will not unduly interrupt the flow of pedestrian traffic or result in any undue conflict between pedestrian and vehicular movement; and

(4) for modifications of the design requirements for a publicly accessible space, open or enclosed:

(i) the publicly accessible space and proposed #building# on the #qualifying site# are designed in a manner that results in a cohesive and harmonious site plan,

(ii) the publicly accessible space is superior in design and quality of amenities;

(iii) the publicly accessible space provides connections to pedestrian circulation spaces in the immediate vicinity;

(iv) the pedestrian network of the surrounding area is enhanced by the publicly accessible space; and

(v) such waiver is the minimum waiver necessary to afford relief. No modifications to the required amount of publicly accessible space set forth in paragraph (b) of Section 81-681 shall be permitted.

All applications pursuant to this Section shall be referred to the affected Community Board, the local Council Member, and the Manhattan Borough President. No authorization shall be granted prior to 60 days after such referral.

The Commission may prescribe appropriate conditions and safeguards to minimize adverse effects on the character of the surrounding area.

81-685 - Special permit to modify qualifying site provisions

LAST AMENDED
8/9/2017

In conjunction with any application that would allow additional #floor area# permitted beyond the basic maximum #floor area# for a #qualifying site# set forth in Section 81-64 (Special Floor Area Provisions for Qualifying Sites), the City Planning Commission may permit modifications to certain #qualifying site# criteria, as well as height and setback regulations and mandatory plan elements, as set forth in paragraph (a) of this Section, provided that the Commission determines that the application requirements set forth in paragraph (b) and the findings set forth in paragraph (c) of this Section are met.

(a) The Commission may modify the following, whether singly or in any combination:

(1) the following #qualifying site# criteria:

(i) the requirement for minimum #wide street# frontage, including the requirement that no existing #buildings# will remain on such #wide street# frontage, set forth in paragraphs (b) and (c) of the definition of a #qualifying site# in Section 81-613 (Definitions);

(ii) the #building# performance and publicly accessible space requirements in paragraph (f) of the definition of a #qualifying site# and Section 81-681 (Mandatory requirements for qualifying sites);

(iii) the requirement that the additional #floor area# permitted through the provisions of Section 81-64 be achieved exclusively through a #development#;

(iv) the requirement that a #qualifying site# be comprised of a single #zoning lot#, provided that the two or more #zoning lots# constituting such #qualifying site# are contiguous and include the #zoning lot# occupied by Grand Central Terminal. All #bulk# regulations of this Chapter shall apply to such modified #qualifying site# without regard to #zoning lot lines#; or

(v) the requirement that a #development# or #enlargement# exceed the basic maximum #floor area ratio# set forth in Row A of the table in Section 81-64 as a pre-condition to an increase in #floor area# pursuant to such table, where

a #qualifying site# includes the #zoning lot# occupied by Grand Central Terminal;

(2) the provisions for #zoning lots# divided by district boundaries set forth in Sections 77-02 (Zoning Lots Not Existing Prior to Effective Date or Amendment of Resolution), 77-21 (General Provisions) or 77-22 (Floor Area Ratio), and the provisions of Section 81-612 (Applicability along district boundaries) requiring that #zoning lots# divided by Subarea boundaries utilize the provisions of Article VII, Chapter 7;

(3) for #qualifying sites# modified pursuant to paragraph (a)(1)(iv) and paragraph (a)(1)(v) of this Section:

(i) the pre-condition of achieving the maximum as-of-right #floor area ratio# for #qualifying sites# set forth in Row E of the table in Section 81-64 prior to, or in conjunction with, the special permits set forth in Sections 81-644 (Special permit for transit improvements) and 81-645 (Special permit for a public concourse), provided that, prior to obtaining a new building permit for a #development# utilizing bonus #floor area# granted pursuant to Sections 81-644 or 81-645, a contribution is made to the #Public Realm Improvement Fund# in an amount that is commensurate with what the provisions of Section 81-642 (Transfer of development rights from landmarks to qualifying sites) would require if the #zoning lot# occupied by Grand Central Terminal were a #granting lot# and the #development# site were a #receiving lot#; and

(ii) the permitted #floor area ratio# attributable to the combination of the special permits set forth in Row F and Row G of the table in Section 81-64, from 3.0 to 6.0;

(4) the #street wall# regulations of Sections 81-43 (Street Wall Continuity Along Designated Streets) or 81-671 (Special street wall requirements), inclusive;

(5) the height and setback regulations of Sections 81-26 (Height and Setback Regulations – Daylight Compensation), inclusive, 81-27 (Alternate Height and Setback Regulations –Daylight Evaluation), inclusive, or 81-66 (Special Height and Setback Requirements);

(6) the mandatory district plan elements of Sections 81-42 (Retail Continuity Along Designated Streets), 81-44 (Curb Cut Restrictions), 81-45 (Pedestrian Circulation Space), 81-46 (Off-street Relocation or Renovation of a Subway Stair), 81-47 (Major Building Entrances), 81-48 (Off-street Improvement of Access to Rail Mass Transit Facility), 81-674 (Ground floor use provisions), 81-675 (Curb cut restrictions and loading berth requirements), 81-676 (Pedestrian circulation space requirements) or 37-50 (REQUIREMENTS FOR PEDESTRIAN CIRCULATION SPACE), inclusive, except that no modifications to the required amount of pedestrian circulation space set forth in Section 37-51 shall be permitted; or

(7) for #qualifying sites# modified pursuant to paragraph (a)(1)(iv) or paragraph (a)(1)(v) of this Section, the time period for substantial construction to be completed prior to the lapse of any special permit granted for such #qualifying site#, as set forth in Section 11-42 (Lapse of Authorization or Special Permit Granted by the City Planning Commission Pursuant to the 1961 Zoning Resolution), provided that such time period does not exceed 10 years.

(b) Application requirements

Applications for a special permit for modifications pursuant to this Section shall contain materials, of sufficient scope and detail, to enable the Commission to determine the extent of the proposed modifications. In addition, where modifications to #street wall# or height and setback regulations are proposed, any application shall contain the following materials, at a minimum:

(1) drawings, including but not limited to, plan views and axonometric views, that illustrate how the proposed #building# will not comply with the #street wall# regulations of Section 81-43, or as such provisions are modified pursuant to Section 81-671, as applicable, and that illustrate how the proposed #building# will not comply with the height and setback regulations of Sections 81-26 or 81-27, or as such provisions are modified pursuant to Section 81-66, as applicable;

(2) where applicable, formulas showing the degree to which such proposed #building# will not comply with the length and height rules of Section 81-26, or as such provisions are modified pursuant to Section 81-66;

(3) where applicable, #daylight evaluation charts# and the resulting daylight evaluation score showing the degree to which such proposed #building# will not comply with the provisions of Section 81-27 or as such provisions are modified pursuant to Section 81-66; and

(4) for any #development# or #enlargement# on a #qualifying site# that includes Grand Central Terminal, a report from the Landmarks Preservation Commission concerning the harmonious relationship of the #development# or, where permitted, #enlargement# to Grand Central Terminal.

(c) Findings

The Commission shall find that such proposed modifications:

(1) to the definition of #qualifying site# are the minimum extent necessary, and are harmonious with the Subdistrict objective to protect and strengthen the economic vitality and competitiveness of East Midtown by facilitating the development of exceptional modern and sustainable office towers;

(2) to the requirement for #wide street# frontage in the definition of #qualifying sites# will not unduly concentrate #bulk# towards the middle of the #block# to the detriment of the surrounding area;

(3) to the #building# performance requirements in the definition of #qualifying sites# and paragraph (a) of Section 81-681:

(i) are necessary due to the presence of existing #buildings# on the site; and

(ii) will not detract from the incorporation of innovative sustainable design measures;

(4) to the publicly accessible space requirements in the definition of #qualifying sites# and paragraph (b) of Section 81-681:

(i) are the minimum necessary to accommodate the proposed #building#; and

(ii) that any reduction or waiver will result in a better site plan and will not detract from a lively streetscape and pedestrian experience;

(5) to regulations pertaining to #zoning lots# divided by district boundaries will result in better site planning;

(6) to #floor area ratio# requirements will facilitate significant improvements to transit infrastructure and the public realm in and around Grand Central Terminal;

(7) to the mandatory district plan elements:

(i) will result in a better site plan for the proposed #development# or #enlargement# that is harmonious with the mandatory district plan element strategy of the #Special Midtown District#, as set forth in Section 81-41 (General Provisions);

(ii) any adverse impact on retail continuity is minimized by a site plan that requires pedestrian-oriented #uses# along the boundaries of any open or enclosed public areas within the #zoning lot#;

(8) to the #street wall# or height and setback regulations:

(i) are necessary due to constraints or conditions of the #development# or #enlargement# and conditions imposed by the configuration of the site;

(ii) will not unduly obstruct the access of light and air to surrounding properties;

(iii) will result in an improved distribution of #bulk# on the #zoning lot# that is harmonious with the height and setback goals of the #Special Midtown District# set forth in Section 81-251 (Purpose of height and setback regulations); and

(iv) the overall design of the #building# demonstrates an integrated and well-considered facade, taking into account

factors such as #street wall# articulation, and fenestration, that creates a prominent and distinctive #building# which complements the character of the surrounding area and constitutes a distinctive addition to the Midtown Manhattan skyline; and

(9) to the time period for substantial construction to be completed prior to the lapse of any special permit granted for such #qualifying site# are necessary due to the complexity of demolition and construction on the site.

The Commission may prescribe appropriate conditions and safeguards to minimize adverse effects on the character of the surrounding area.

81-686 - Contribution in-kind for certain public realm improvements

LAST AMENDED
8/9/2017

The Chairperson of the City Planning Commission shall allow, by certification, in conjunction with a certification pursuant to Sections 81-642 (Transfer of development rights from landmarks to qualifying sites) or, where applicable, 81-643 (Special provisions for retaining non-complying floor area in commercial buildings), the applicant for a #development# or, where permitted, #enlargement# on a #qualifying site# that is immediately adjacent to a sidewalk improvement identified in the Public Realm Improvement Concept Plan to undertake such improvement, and to deduct the cost of such improvement from their contribution to the #Public Realm Improvement Fund#, provided that the provisions of this Section are met.

(a) The following requirements shall be completed prior to application for certification by the Chairperson:

(1) the applicant shall submit preliminary plans for the proposed improvement to the Chairperson, the Department of Transportation (DOT), and the #Public Realm Improvement Fund Governing Group# (the "Governing Group");

(2) DOT shall provide a letter to the Chairperson and the Governing Group containing a conceptual approval of the proposed improvement including a statement of any considerations regarding the construction and operation of the improvement;

(3) construction documents and cost estimates shall be prepared for such proposed improvements by a professional engineer, and submitted to the Chairperson, the DOT and the Governing Group;

(4) upon review, the DOT and the Governing Group shall either approve such construction documents and costs estimates or detail discrepancies to be resolved by the applicant; and

(5) upon approval of the construction documents and cost estimates by the DOT and Governing Group, and prior to the issuance of a building permit as set forth in Section 81-642 and in this Section, the applicant shall execute agreements and legally enforceable instruments running with the land, setting forth the obligations of the owner and developer, their successors and assigns, to design and construct the improvement in accordance with the requirements of the DOT. A certified copy of such legal instruments shall be sent to the Chairperson.

(b) Upon submittal of all the items in paragraph (a) of this Section, along with drawings indicating the portion of the #building# utilizing transferred #floor area# pursuant to the provisions of Section 81-642 or, where applicable, 81-643, the Chairperson shall certify that a #development# or, where permitted, #enlargement# on a #qualifying site# may undertake an improvement to an adjoining sidewalk.

The execution and recording of legal instruments in accordance with paragraph (a) of this Section shall be a precondition to the issuance of any foundation permit or new building permit or alteration permit by the Department of Buildings allowing a #development# or, where permitted, #enlargement# on a #qualifying site# undertaking a contribution-in-kind pursuant to this Section.

(c) Upon certification by the Chairperson, monies equal to such agreed upon cost estimate between the applicant, DOT and the Governing Group shall be deposited by the applicant into an escrow account or other similar account established by the Governing Group, which shall not be commingled with the #Public Realm Improvement Fund# ("the Improvement Fund").

(d) No temporary certificate of occupancy shall be granted by the Department of Buildings for the portion of the #building# utilizing transferred #floor area# pursuant to Section 81-642 until the Chairperson of the City Planning Commission, acting in consultation with the DOT and the Governing Group, has certified that the improvements are substantially complete and usable by the public. No permanent certificate of occupancy shall be granted by the Department of Buildings until the improvements have finally been completed in accordance with the approved plans and such final completion has been approved by the Chairperson, the DOT and the Governing Group.

(e) Upon completion of the sidewalk improvement, the monies secured in the escrow account or other similar account established by the Governing Group shall be released to the applicant.

(f) In the event that an applicant utilizing the provisions of this Section has not completed the sidewalk improvements within five years of obtaining a new building permit or alteration permit from the Department of Buildings, the Governing Group shall release the monies in the escrow account or other similar account to the Improvement Fund.

81-70 - SPECIAL REGULATIONS FOR THEATER SUBDISTRICT

LAST AMENDED
5/13/1982

81-71 - General Provisions

LAST AMENDED
9/13/2006

The regulations of Sections 81-72 to 81-75, inclusive, relating to Special Regulations for the Theater Subdistrict, are applicable only in the Theater Subdistrict, of which the Theater Subdistrict Core and the Eighth Avenue Corridor are parts, except that any listed theater designated in Section 81-742, or portion thereof, located outside of the Theater Subdistrict shall be deemed to be a "granting site" pursuant to Section 81-744 (Transfer of development rights from listed theaters).

The Theater Subdistrict is bounded by West 57th Street, Avenue of the Americas, West 40th Street, Eighth Avenue, West 42nd Street, a line 150 feet west of Eighth Avenue, West 45th Street and Eighth Avenue.

The Theater Subdistrict Core is bounded by West 50th Street, a line 200 feet west of Avenue of the Americas, West 43rd Street and a line 100 feet east of Eighth Avenue.

The Eighth Avenue Corridor is bounded by West 56th Street, a line 100 feet east of Eighth Avenue, West 43rd Street, Eighth Avenue, West 42nd Street, a line 150 feet west of Eighth Avenue, West 45th Street and Eighth Avenue.

The west side of Eighth Avenue between 42nd and 45th Streets is also subject to the provisions of the Special Clinton District to the extent set forth in Article IX, Chapter 6, subject to Section 81-023 (Applicability of Special Clinton District regulations).

These boundaries are shown on Map 1 (Special Midtown District and Subdistricts) in Appendix A of this Chapter. The regulations of Sections 81-72 to 81-75, inclusive, supplement or modify the regulations of this Chapter applying generally to the #Special Midtown District# of which the Subdistrict is a part.

In order to preserve and protect the character of the Theater Subdistrict as a cultural, theatrical and entertainment showcase as well as to help ensure a secure basis for the useful cluster of shops, restaurants and related amusement activities, special incentives and controls are provided for the preservation and rehabilitation of existing theaters and special restrictions are placed on ground floor #uses# within the Subdistrict. In order to preserve and protect the special scale and character of the Theater Subdistrict Core, which includes Times Square, special #building# #street wall# height and setback controls and requirements for the inclusion of #illuminated signs# and entertainment and entertainment-related #uses# apply within the Subdistrict Core. In order to ensure the orderly growth and development of the Eighth

Avenue Corridor and its transition to the scale and character of adjoining midblocks, special #building# #street wall#, height and setback controls apply within the Corridor. In order to preserve and maintain the character of the western edge of the Theater Subdistrict as both an integral part of the Theater Subdistrict and as a transition to the Clinton neighborhood, the west side of Eighth Avenue between 42nd and 45th Streets is also subject to the provisions of the Special Clinton District.

A Theater Subdistrict Council shall be created comprised of the Mayor, three (3) representatives appointed by the Mayor from the performing arts, theatrical and related industries, the Director of the Department of City Planning, the Speaker of the City Council and his or her designee, and the Manhattan Borough President. The members shall choose a Chair from among themselves. The Theater Subdistrict Council shall be a not-for-profit corporation whose organizational purpose shall be limited solely to promoting theater and theater-related use and preservation within the Theater Subdistrict and promoting the welfare of the Theater Subdistrict generally. The goals of the Theater Subdistrict Council shall include enhancing the long-term viability of Broadway by facilitating the production of plays and small musicals within the Theater Subdistrict, developing new audiences for all types of theatrical productions, and monitoring preservation and use covenants in Broadway's "listed theaters."

The Theater Subdistrict Council shall adopt a plan every three years for the sale, distribution and marketing of reduced price tickets to new and undeveloped audience groups. Such plan shall include locations outside of the Theater Subdistrict where such reduced price tickets will be available. The plan shall also include a way to evaluate yearly its effectiveness by:

(a) the number of tickets sold; and

(b) the penetration of the new identified markets which shall be reported to the Chairperson of the City Planning Commission and filed with the Council of the City of New York.

The Theater Subdistrict Council shall advise the Chairperson of the City Planning Commission concerning applications for any special permit, authorization or certification pursuant to the special regulations for the Theater Subdistrict and shall be the holder and administrator of the funds received in connection with transfers of development rights from "listed theaters" pursuant to Section 81-744 in accordance with the provisions for the Theater Subdistrict Fund set forth in paragraph (h) of Section 81-741 (General provisions).

81-72 - Use Regulations Modified

LAST AMENDED
2/2/2011

The #use# regulations of this Section, inclusive, shall apply within that portion of the Theater Subdistrict bounded by West 40th Street, a line 100 feet east of Eighth Avenue, West 51st Street and a line 200 feet west of Avenue of the Americas, to #buildings# #developed# after May 13, 1982, to portions of #buildings# #enlarged# on the ground floor level after May 13, 1982, and to #extensions#.

81-721 - Required use allocations on street frontages

LAST AMENDED
8/6/1998

#Uses# located on the ground floor or entered by stairs from a sidewalk entry, except for #uses# with no #street# frontage and accessible only through a lobby, shall be limited as follows:

(a) On any #wide street#, at least 80 percent of any #wide street# #front lot line# ground level frontage shall be allocated to #uses# indicated in Section 81-722 (Use Group T).

(b) On any #narrow street#, at least 50 percent of any #narrow street# #front lot line# ground level frontage shall be allocated to #uses# indicated in Section 81-722.

(c) For #zoning lots# between 43rd and 50th Streets with #street# frontage on Broadway and/or Seventh Avenue, at least 50 percent of any length of #narrow street# #front lot line# ground level frontage within 100 feet of Broadway or Seventh Avenue shall be allocated to #uses# permitted only on #wide street# frontages in Section 81-722.

Where a stairway entrance into a subway is relocated onto a #zoning lot# pursuant to Section 81-46 (Off-street Relocation or Renovation of a Subway Stair), up to, but not more than, 40 feet of the #narrow street# #front lot line# ground level frontage occupied by that stairway may be excluded from the length of #narrow street# frontage to which the requirements of this Section apply.

81-722 - Use Group T

LAST AMENDED
9/9/2004

The following #uses# are subject to the limitations on location and #floor area# of the underlying zoning district:

#Uses# marked with an asterisk (*) are allowed only on #narrow street# frontages.

#Uses# marked with double asterisks (**) are allowed only on floors other than the ground floor.

#Uses# marked thus (***) qualify as #uses# satisfying the requirements of Section 81-724 (Requirements for entertainment-related uses).

#Use#

Ambulatory diagnostic or treatment health care facilities listed in Use Group 4

Antique stores

#Apartment hotels# - lobby space is limited to 20 percent of total #zoning lot# frontage on #wide streets#

Appliance, repair shops - not permitted in C5 Districts

Appliances, sales

Art galleries, commercial

* Art galleries, non-commercial

Art metalcraft shops

Art needlework

Artists' supply stores

Athletic goods stores

*** Auditoriums

* Automobile rental establishments - not permitted in C5 Districts

Bakeries

Banks - limited to 15 percent of total #zoning lot# frontage on #wide streets#

* Banquet halls

** Barber shops

** Beauty parlors

Bicycle stores, rental or repair - not permitted in C5 Districts

Bicycle stores, sales

* Blueprinting establishments

* Boarding houses

Book stores or card stores

* Bowling alleys - not permitted in C5 Districts

** Business machines, small shops, rental, repairs, sales

** Business schools or colleges

Candy stores

Carpet, rug, linoleum or other floor covering stores

* Catering establishments

Cigar stores

Clock or watch stores or repair shops

Clothing rental establishments

Clothing stores

* Clubs, non-commercial

Coin stores

* Colleges or universities

* Community centers

* Convents

*** Costume rental establishment

** Dance halls, public - not permitted in C5 Districts

Delicatessen stores

Dressmaking shops, custom

Drug stores

* Dry cleaning establishments

Dry goods or fabric stores

Eating or drinking establishments with entertainment but not dancing, with a capacity of 200 persons or less in C5 Districts, without restrictions in C6 or M1 Districts

*** Eating or drinking places - where there is entertainment or dancing in C6 Districts.

* Fire stations

Fishing tackle or equipment, stores or rental establishments

Florist shops

Food stores, including supermarkets, grocery stores, markets or delicatessen stores

Furniture stores

Furrier shops, custom

Gift shops

Hair products for headwear

Hardware stores

#Health and fitness establishments#

Historical exhibits - not permitted in C5 Districts

Hotels, where permitted pursuant to Section 32-02 (Special Provisions for Hotels) - lobby space limited to 20 percent of total #zoning lot# frontage on #wide streets#

* Household appliance repair shops - not permitted in C5 Districts

* Houses of worship

Ice cream stores

* Institutions, philanthropic or non-profit

Interior decorating establishments

Jewelry shops

Leather goods or luggage stores

* Libraries

Locksmith shops

Luggage stores

* Meeting halls

Millinery shops

*** Motion picture production studios

* Museums

*** Music stores

*** Musical instruments, repair

Newsstands, enclosed

Office or business machine stores, sales or rental

Offices - only lobby space is permitted at grade on #wide street# frontages; lobby is limited to 20 percent of total #zoning lot# frontage on #wide streets#

Optician or optometrist establishments

Orthopedic stores

Paint stores

* Parish houses

* Parks, public or private

#Parking lots, public# and #parking garages, public#, subject to the provisions of Section 81-30 (OFF-STREET PARKING AND OFF-STREET LOADING REGULATIONS)

Pet shops

* Phonographic repair shops - not permitted in C5 Districts

Photographic developing or printing establishments

Photographic equipment stores

Photographic studios

Photographic supply stores

* Photostatting establishments

Picture framing stores

* Police stations

* Post offices

* Printing establishments

* Radio appliance repair - not permitted in C5 Districts

*** Record stores

* Recreation centers, non-commercial

* Rectories

#Residences# - only lobby space is permitted at grade on #wide streets#; lobby space is limited to 20 percent of total #zoning lot# frontage on #wide streets#

* Rooming houses

* #Schools#

* Settlement houses

Sewing machine stores, selling household machines

* Shoe repair shops

Shoe stores

* Sign painting shops - not permitted in C5 Districts

* Skating rinks, indoor - not permitted in C5 Districts

* Skating rinks, outdoor ice

Sporting goods stores

Stamp stores

Stationery stores

* ***Studios, music, dancing or theatrical

* ***Studios, radio or television

* Table tennis halls - not permitted in C5 Districts

Tailor shops, custom

Telegraph offices

* Television repair shops - not permitted in C5 Districts

*** Theater - a new motion picture theater in a new or existing #building# shall provide a minimum of four square feet of waiting area within the #zoning lot# for each seat in such theater. The required waiting space shall be either in an enclosed lobby or open area that is covered or protected during inclement weather and shall not include space occupied by stairs or space within 10 feet of a refreshment stand or entrance to a public toilet - not permitted in C5 Districts

*** Ticket sales

Tobacco stores

Tour operators

Toy stores

* Trade or other schools for adults

Travel expositions - not permitted in C5 Districts

Travel bureau - limited to 15 percent of total #zoning lot# frontage on #wide streets#

Typewriter stores

* Typewriter or other small business machine

repair stores

Variety stores

Wallpaper stores

* Wholesale establishments

* Wholesale offices or showrooms

81-723 - Special ground floor street frontage restrictions

LAST AMENDED
8/6/1998

No single establishment shall have a #wide street# #front lot line# ground level frontage of less than 10 feet.

The following requirements apply to #wide street# #front lot line# ground level frontages and, for #zoning lots# between 43rd and 50th Streets with #street# frontage on Broadway and/or Seventh Avenue, #narrow street# #front lot line# ground level frontages within 100 feet of Broadway or Seventh Avenue:

(a) Any length of #front lot line# ground level #street# frontage of a #zoning lot# devoted to banks and travel bureaus shall not constitute in total more than 15 percent of any such #front lot line# ground level #street# frontage.

(b) Each establishment shall be located within 10 feet of the #lot line# on which it is required to front for the full length of the frontage of that establishment, except that, where a #street wall# recess at #curb level# permitted under Section 81-43 (Street Wall Continuity Along Designated Streets) extends a greater distance from the #lot line#, the length of frontage of any establishment adjoining that recess may be located at an equal, but not greater, distance from the #lot line#.

(c) Lobby space shall not comprise more than 20 percent of any such #front lot line# ground level #street# frontage. In addition, a lobby frontage on any such #front lot line# ground level #street# frontage need not be less than 15 feet.

(d) #Uses# with no #street# frontage and which are accessible only through a lobby shall not be restricted to Use Group T #uses#.

81-724 - Requirements for entertainment-related uses

LAST AMENDED
2/2/2011

With the exception of a #development# or #enlargement# in which more than 50 percent of the new #floor area# is allocated to #transient hotel# #use#, or all of the #floor area# of the #development# or #enlargement# is allocated to #public parking garage# #use#, a #development# or #enlargement# on a #zoning lot# with more than 50 percent of its #zoning lot# area located within the Theater Subdistrict Core shall meet the following requirements:

(a) If the new #floor area# of the #development# or #enlargement# generated by that portion of the #zoning lot# located within the Theater Subdistrict Core exceeds 60,000 square feet, then an amount of floor space on the #zoning lot# equal to five percent of the amount by which such new #floor area# exceeds 50,000 square feet shall be allocated to #uses# listed in Section 81-725 (Entertainment-related uses) or to #front lot line# ground level #uses# designated thus (***) in Section 81-722 (Use Group T), as satisfying the requirements of this Section.

Except as provided in paragraphs (b), (f) and (g) of this Section, the amount of floor space specified shall be located on the same #zoning lot# as the #development# or #enlargement# for which that floor space is provided to meet the requirements of this Section.

(b) A maximum of 75 percent of the amount of floor space specified in paragraph (a) of this Section may be located on a separate #zoning lot#, with the remainder located on the same #zoning lot# as the #development# or #enlargement#, by authorization of the City Planning Commission provided, upon examination of proposed plans, the Commission finds that:

(1) one of the following conditions exists:

(i) more than 50 percent of the area of the separate #zoning lot# is located within the Theater Subdistrict Core;

(ii) the separate #zoning lot# is located within the Theater Subdistrict and the floor space located on such separate #zoning lot# is allocated in its entirety to studios (music, dancing or theatrical), a theater designed and arranged for live performances of drama, music or dance, and #uses# accessory thereto, or a combination thereof, as listed in Section 81-725, and that the separate #zoning lot# is located within the Theater Subdistrict; or

(iii) the separate #zoning lot# is located within an area bounded by West 42nd Street, Sixth Avenue, West 57th Street, a line 175 feet west of Ninth Avenue, West 52nd Street and a line 150 feet west of Eighth Avenue, and the floor space located on such separate #zoning lot# is allocated in its entirety to studios (music, dancing or theatrical), a theater designed and arranged for live performances of drama, music or dance, or a combination thereof, and any support spaces related thereto, not including administrative office space, where such floor space occupies no less than 25,000 square feet;

(2) the floor space located on the separate #zoning lot# is in addition to any floor space provided to meet the requirements of this Section for any other #development# or #enlargement#;

(3) the floor space located on the separate #zoning lot# is constructed or renovated specifically for the purpose of meeting the requirements of this Section and has not been utilized for any of the #uses# listed in Section 81-725 at any time during the two-year period immediately prior to the date on which this authorization, as described in paragraph (b) of this Section, is granted; and

(4) the #use# located on the separate #zoning lot# achieves a reasonable distribution of entertainment-related #uses# and locations of such #uses#.

(c) Except as provided in this paragraph (c), floor space allocated to entertainment-related #uses# listed in Section 81-725, accommodating any number of occupants, shall be classified under Sections 27-254 to 27-258 (Title 27, Chapter 1, Subchapter 3, Article 8 - Occupancy Group F-Assembly) of the 1968 Building Code or Section BC 303 of the 2008 Building Code, as applicable, and shall meet all relevant requirements of Sections 27-522 to 27-549 (Title 27, Chapter 1, Subchapter 8-Places of Assembly) of the 1968 Building Code or Section BC 1024 of the 2008 Building Code, as applicable.

Alternatively, where floor space in an existing #building# is allocated to #uses# listed in Section 81-725 in order to meet the requirements of this Section, the Commission may, by authorization, modify or waive the Code requirements of this paragraph (c) if, upon examination of proposed plans, it finds that:

(1) the existing #building# does not otherwise require structural alteration to accommodate the entertainment-related #uses#; and

(2) two plaques will be provided prior to the issuance of any certificate of occupancy for the floor space so allocated to be affixed, as follows:

(i) the first in a prominently visible location either to the exterior wall of the #building# at ground level adjacent to the main entry or in the main lobby stating that floor space in the #building# is provided to meet the requirements of this Section; and

(ii) the second either on or immediately adjacent to the corridor or lobby side of the main door to the space itself stating that such floor space is located within that part of the #building#.

Each plaque shall indicate in letters, not less than one inch high, the amount of entertainment-related floor space in square feet, the floor or floors on which it is located, the category of #use# under Section 81-725 to which it is dedicated, and the name and street address of the #development# or #enlargement# for which it partially fulfills the requirements of this Section.

(d) The certificate of occupancy for the #development# or #enlargement# shall record and specifically describe all floor space allocated to meet the requirements of this Section and shall require the permanent reservation of this space for such purposes as a condition of the certificate of occupancy.

If a portion of the amount of the specified floor space is located on a separate #zoning lot#, no certificate of occupancy for the #development# or #enlargement# shall be issued until a certificate of occupancy has been issued for that floor space provided on the separate #zoning lot# and all other floor space allocated to fulfill the requirements of this Section.

The certificate of occupancy for the #development# or #enlargement# shall identify the amount and location of such specified floor space provided on the separate #zoning lot#. The certificate of occupancy of the separate #zoning lot# shall identify the #development# or #enlargement# for which the specified floor space is provided and the amount and location of that floor space on the separate #zoning lot#. Both certificates of occupancy shall require the permanent reservation of the floor space provided on the separate #zoning lot# for #uses# which meet the requirements of this Section.

An amount of floor space allocated in an existing #building# to meet the requirements of this Section may be reallocated to another location, except that no floor space allocated in an existing #building# located within the Theater Subdistrict may be reallocated to another location outside the Theater Subdistrict. Such reallocation shall be made provided that the Commission finds, by authorization, that all of the requirements of this Section are still met and that the Commission has received sufficient assurances that the certificates of occupancy of the #development# or #enlargement# and the #building# to which the floor space has been reallocated, will be amended within a period of time after the date of such authorization specified therein to accord with the

provisions of this Section.

(e) A written declaration shall be recorded against the #zoning lot# of the #development# or #enlargement# and against the separate #zoning lot#, which contains an agreement that the floor space provided on the separate #zoning lot# shall be used solely for entertainment-related #uses# for the life of the #development# or #enlargement#.

If floor space allocated to entertainment-related #uses# on the separate #zoning lot# is reallocated in accordance with the provisions of paragraph (d) of this Section, the agreement contained in the written declaration shall be amended so that the #zoning lot# on which the newly allocated floor space is located complies with paragraph (d).

(f) If a certificate of occupancy for floor space to be located on a separate #zoning lot#, pursuant to the provisions of paragraph (b) of this Section, is not reasonably anticipated to be issued prior to the date upon which the #development# or #enlargement# would otherwise be eligible for issuance of a certificate of occupancy, the Commission may also authorize the waiver of any or all of the provisions of paragraphs (b)(3), (d) and (e) of this Section, provided that:

(1) the owner or lessee of the #development# or #enlargement#, or an affiliate thereof, will make or cause to be made a financial contribution, through payment or repayment of the costs thereof, which will facilitate on such separate #zoning lot#, the #development# of a #building# that will consist predominantly of either entertainment-related #uses# and #uses# accessory thereto or #community facility# #uses# where at least 25,000 square feet of such floor space allocated to meet the requirements of this Section shall be allocated in its entirety to studios (music, dancing or theatrical), a theater designed and arranged for live performances of drama, music or dance, or a combination thereof, and any support spaces related thereto not including administrative office space;

(2) the Department of City Planning has received a fully executed copy of a written declaration against such separate #zoning lot#, requiring that the floor space allocated to meet the requirements of this Section and located on the separate #zoning lot# shall be used solely for entertainmentrelated #uses# and #uses# #accessory# thereto for the life of the #development# or #enlargement#. Prior to the release of the financial contribution, pursuant to paragraph (f)(3) of this Section, such declaration shall be filed and duly recorded in the borough office of the City Register of the City of New York, indexed against the property in the form of a legal instrument providing notice of the authorization pursuant to this Section;

(3) such financial contribution will be deposited in a trust and agency account, to be released upon a determination made in writing by the Chairperson of the City Planning Commission, made in consultation with the Commissioner of Buildings, that all work on foundations has been completed for such #building#; and

(4) the prospective operator of the entertainmentrelated #uses# in the #building# on such separate #zoning lot#:

(i) has made substantial financial and constructionrelated commitments towards the development of the #building#, including, at a minimum, commitments for site acquisition, such as a purchase agreement, deed or ground lease, and architectural agreements for the design of the floor space; and

(ii) has secured, or has implemented a fundraising plan to secure, the funding necessary for the development of the #building#, other than the financial contribution by the owner or lessee of the #development# or #enlargement#.

Where the Commission makes the findings set forth in paragraphs (f)(1) through (f)(4) of this Section, inclusive, a certificate of occupancy may be issued for the #development# or #enlargement# requiring the provision of such floor space, notwithstanding that no certificate of occupancy has been issued with respect to the floor space located on the separate #zoning lot#.

(g) In the event that all work on foundations of the #building# on the separate #zoning lot# has not been completed within three years of the grant of an authorization provided under the provisions of paragraph (f) of this Section, the owner or lessee of the #development# or #enlargement# shall, in accordance with the terms of the written declaration recorded against the #development# or #enlargement# at the time of the grant of such authorization, apply to the Commission for:

(1) an extension of the authorization for up to one additional year for good cause shown; or

(2) a new authorization, under paragraph (b) of this Section, for alternative floor space consisting of entertainment-related

#uses# to be located on a separate #zoning lot# as necessary to meet the requirements of this Section.

In granting such authorization for alternative floor space, the Commission may waive the provisions of paragraph (b)(3) of this Section, provided the floor space was not utilized for any of the #uses# listed in Section 81-725 at any time during the two-year period immediately prior to the date on which the authorization was originally granted under paragraph (b) of this Section.

(h) Floor space allocated in an existing #building# on a separate #zoning lot#, pursuant to an authorization granted under paragraph (f) of this Section, may be reallocated to another location, provided that the Commission finds, by authorization, that all applicable requirements of this Section are met, except that no floor space allocated in an existing #building# located within the Theater Subdistrict may be reallocated to another location outside the Theater Subdistrict.

(i) All #uses# satisfying the requirements of this Section shall be subject to the locational requirements of Section 81-72 (Use Regulations Modified).

81-725 - Entertainment-related uses

LAST AMENDED
4/28/1988

Auditoriums, with capacity limited to 2,500 seats

Dance halls, public

Eating or drinking places, where there is entertainment or dancing

Museums, upon authorization by the City Planning Commission that the contents are predominantly theater and/or entertainment-related and are publicly exhibited on a continuing basis

Studios, motion picture production

Studios, music, dancing or theatrical

Studios, radio or television

Theaters

81-73 - Special Sign and Frontage Regulations

LAST AMENDED
5/13/1982

81-731 - Special regulations for signs, transparency, banners and canopies

LAST AMENDED
5/8/2013

Within that area of the Theater Subdistrict whose boundaries are described in Section 81-72 (Use Regulations Modified), the following provisions apply along #wide street# frontages. Within the Theater Subdistrict Core, the following provisions also apply along #narrow street# frontages.

(a) At least 50 percent of the #street wall# of a #development# or ground floor #enlargement# shall be glazed at the ground floor level with clear, untinted, transparent material and not more than 50 percent of such transparent surface shall be painted or obstructed with #signs#.

For the purpose of the glazing requirements, the #street wall# surface at the ground floor level shall be measured from the floor to the height of the ceiling or 14 feet above grade, whichever is less, and shall exclude any area of #street wall# occupied by #accessory#

off-street loading berths or entrances and exits to #accessory# off-street parking provided pursuant to the provisions of Section 81-30 (OFF-STREET PARKING AND OFF-STREET LOADING REGULATIONS). For the purposes of this Section, clear, unobstructed openings in the surface of a #street wall# provided for a stairway entrance into a subway relocated onto a #zoning lot# in accordance with the requirements of Section 81-46 (Off-street Relocation or Renovation of a Subway Stair) or a through #block# connection provided in accordance with the requirements of paragraph (h) of Section 37-53 (Design Standards for Pedestrian Circulation Spaces) shall be treated as transparent glazed surfaces.

(b) Canopies (as defined in the Building Code) and awnings shall not be permitted on the exterior of any #building#.

For the purposes of this Section, any #signs# which do not comply with the regulations of this Section may be continued for one year after May 13, 1982, provided that after the expiration of that period such #non-conforming# #sign# shall terminate; a #sign# which the Chairperson of the City Planning Commission certifies as an integral part of the #building# shall not be required to terminate.

81-732 - Special Times Square signage requirements

LAST AMENDED
2/2/2011

The provisions of this Section shall apply to all #developments# and #enlargements# on #zoning lots# between 43rd and 50th Streets with #street# frontage on Seventh Avenue and/or Broadway in the Theater Subdistrict.

No building permit shall be issued by the Department of Buildings for any portion or all of a #development# or #enlargement# on a #zoning lot# between 43rd and 50th Streets with #street# frontage on Seventh Avenue and/or Broadway without prior submission of drawings showing that the #sign# requirements related to #surface area#, location and number of #signs# set forth in paragraphs (a), (b) and (c) of this Section have been met and that electrical power is provided in amounts and locations sufficient to illuminate all such required #signs# to the illumination levels specified herein. Such drawings shall include, at a scale of 1/16 inch equals one foot, a plan, elevations of #narrow streets# and Seventh Avenue and/or Broadway and cross-sections showing setbacks on Seventh Avenue, Broadway and #narrow streets#. These drawings shall show, for all the #signs# required under this Section, their number and for each, its #surface area# and location and shall list each requirement and the actual dimensions or areas achieved in the design.

Temporary certificates of occupancy for #floor area# of the #development# or #enlargement# comprising in aggregate more than 50 percent of the total #floor area# of the #development# or #enlargement# shall not be issued by the Department of Buildings until 50 percent of the aggregate #surface area# of #signs# required under paragraph (a)(3) of this Section has been installed and put in operation in accordance with all of the requirements and standards as set forth in paragraphs (a)(3) and (a)(7) of this Section.

Temporary certificates of occupancy for #floor area# of the #development# or #enlargement# comprising in aggregate more than 90 percent of the total #floor area# of the #development# or #enlargement# shall not be issued by the Department of Buildings until 90 percent of the aggregate #surface area# of #signs# required under paragraphs (a)(3) of this Section has been installed and put in operation in accordance with all of the requirements and standards as set forth in paragraphs (a)(3) and (a)(7) of this Section.

Neither temporary certificates of occupancy for #floor area# of the #development# or #enlargement# comprising in aggregate 100 percent of the total #floor area# of the #development# or #enlargement# nor a first permanent certificate of occupancy for the #development# or #enlargement# shall be issued by the Department of Buildings until all of the #signs# required under this Section have been installed and put in operation in accordance with all of the requirements and standards as set forth in paragraphs (a)(3) and (a)(7) of this Section.

Notwithstanding the foregoing requirements relating to the granting of certificates of occupancy, the City Planning Commission may, prior to January 1, 2003, certify to the Commissioner of Buildings that compelling circumstances warrant the waiver of any or all such provisions. In granting any such waiver, the Commission shall establish a completion schedule, not to exceed one year from the date of such certification, for the installation and operation of all requisite #signs# in accordance with all of the requirements and standards as set forth in paragraphs (a)(3) and (a)(7) of this Section. The Commission, as it deems appropriate, shall also require security for performance under the schedule and may prescribe other conditions to address the delay in installation and operation of requisite #signs#.

(a) All #developments# located on #zoning lots# between 43rd and 50th Streets with #street# frontage on Seventh Avenue and/or Broadway shall provide #signs# meeting all of the following requirements:

(1) At least one #illuminated sign# shall be provided for each ground floor establishment with a #street# frontage on Seventh Avenue, Broadway or a #narrow street# for the full length of the #zoning lot# frontage or the first 100 feet from Seventh Avenue or Broadway, whichever is less. With the exception of theater #signs#, each required #illuminated sign# shall be located directly behind the clear, untinted, transparent material with which the #street wall# is required to be glazed under Section 81-731 (Special regulations for signs, transparency, banners and canopies). There shall be no obstructions between the #sign# and the glazing material.

(2) In addition, #illuminated signs# shall be provided with a minimum aggregate #surface area# of 12 square feet for each linear foot of #street# frontage of the #zoning lot# on Seventh Avenue, Broadway and intersecting #narrow streets# up to the first 40 linear feet of #street# frontage from either Seventh Avenue or Broadway.

No portion of any #illuminated sign# required under this paragraph, (a)(2), shall be located:

(i) further than 40 feet from the Broadway or Seventh Avenue #street line#;

(ii) below a height of 10 feet above #curb level# or above the top of the #street wall# of the #building# before setback as defined in Section 81-75 (Special Street Wall and Setback Requirements).

There shall be a minimum of one #sign# with a #surface area# of not less than 100 square feet for each 25 linear feet, or part thereof, of #zoning lot# #street# frontage on Seventh Avenue or Broadway.

(3) In addition, #illuminated signs# shall be provided with a minimum aggregate #surface area# of 50 square feet for each linear foot of #street# frontage of the #zoning lot# on Seventh Avenue, Broadway and intersecting #narrow streets# up to the first 40 linear feet of #street# frontage from either Broadway or Seventh Avenue, except that for any one #zoning lot#, the required minimum aggregate #surface area# shall not exceed 12,000 square feet.

No portion of any #illuminated sign# required under this paragraph (a)(3) shall be located:

(i) further than 40 feet from the Seventh Avenue or Broadway #street line# except that, for a #zoning lot# with #street# frontage on Seventh Avenue, Broadway and at least one #narrow street#, the areas of required #signs# specified in paragraph (a)(3)(ii) of this Section may be located without distance limit from the Seventh Avenue or Broadway #street line#;

(ii) below a height of 10 feet or above a height of 120 feet above #curb level#, except that for a #zoning lot# with #street# frontage on Seventh Avenue, Broadway and 47th Street, a minimum of 25 percent of the minimum aggregate #surface area# required under this Section or 7,500 square feet, whichever is greater, shall comprise #signs# no portion of which shall exceed 250 feet in height above #curb level#, and each of which shall face the intersection of the center lines of 45th Street and Broadway and shall have its #surface area# measured by projecting its edges onto a plane perpendicular to a line drawn between the center of the #sign# and the above intersection at ground level and measuring the resultant #surface area# on that plane; and, for other #zoning lots# with #street# frontage on Seventh Avenue, Broadway and a #narrow street# a maximum of 25 percent of the minimum aggregate #surface area# required under this Section may comprise #signs# located without height limit provided that each such #sign# faces the intersection of the center lines of 45th Street and Broadway and its #surface area# is measured by projecting its edges onto a plane perpendicular to a line drawn between the center of the #sign# and the above intersection at ground level and measuring the resultant #surface area# on that plane.

Where a #zoning lot# is located at the intersection of Seventh Avenue or Broadway and one or more #narrow streets#, at least 60 percent of the minimum aggregate #surface area# of signage required under this paragraph, (a)(3), shall be located within 50 feet of the #narrow streets#. Where a #zoning lot# is located at two such intersections, at least 15 percent of the minimum aggregate #surface area# required under this subsection shall be within 50 feet of each #narrow street#. Where a #zoning lot# is located at three or more such intersections, at least seven percent of the minimum aggregate #surface area# required under this Section shall be within 50 feet of a #narrow street# at each intersection of that #narrow street# and Seventh Avenue or Broadway.

There shall be a minimum of one #illuminated sign# with a #surface area# of not less than 1,000 square feet for each 50 linear feet, or part thereof, of #street# frontage on Seventh Avenue or Broadway, except that for any one #zoning lot# no more than five #signs# shall be required.

With the exception of #signs# defined in paragraph (a)(3)(ii) of this Section as facing the intersection of the centerlines of 45th Street and Broadway, at least 75 percent of the #surface area# of #signs# required under this paragraph, (a)(3), shall be placed at an angle in plan view of not more than 45 degrees to the Seventh Avenue or Broadway #street line#.

#Signs# required under this paragraph, (a)(3), shall, when installed on the #building# and set in operation, meet at a minimum the requirements set out in paragraphs (a)(3)(iii), (iv) and (v) of this Section. The illumination standards contained therein for each #sign# shall be measured with an apparatus (to be known as a Light Unit Times Square or "LUTS" meter) comprising an illuminance meter attached to a 35 millimeter single lens reflex camera body and fitted with a lens of appropriate focal length in accordance with the diagrams herein (see Illustrations of Sign Brightness Measurement System - LUTS Meter). The lens shall be set at F-stop 11.

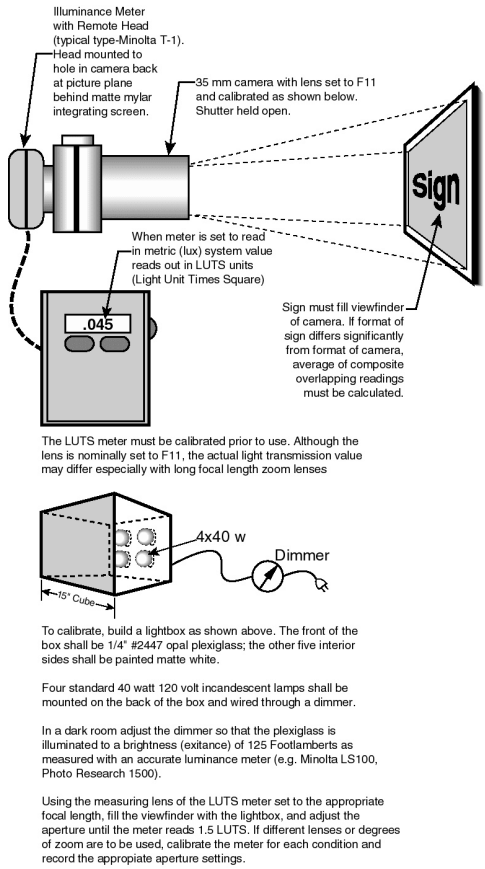

SIGN BRIGHTNESS MEASUREMENT SYSTEM

(LUTS Meter)

(81-732a3ii)

The LUTS Meter shall be calibrated against a reference standard (See illustrations of Sign Brightness Measurement System - LUTS Meter). Alternative measuring equipment may be employed provided such equipment provides identical measurement against the reference standard described herein.

In measuring the brightness of the whole of a #sign# under the provisions of paragraphs (a)(3)(iii) and (iv) of this Section, the illumination level of the #sign# shall be determined by pointing the LUTS Meter at the #sign# so that

the entire #sign# completely fills the viewing frame of the meter. If, because of the shape of the #sign#, the entire #sign# cannot be viewed within the viewing frame, readings may be taken of discrete portions of the #sign# separately, provided, however, that no more of the #sign# than is absolutely necessary to measure the entire #sign#, may be included in more than one such reading. Readings of portions of a #sign# shall be averaged to obtain the average illumination level of the entire #sign#.

In measuring the brightness of a portion of a #sign# required to meet the incident illumination standards specified in paragraphs (a)(3)(iii) and (iv) of this Section, the illumination level of that portion of the #sign# shall be determined by pointing the LUTS Meter at that portion so that the entire portion completely fills the viewing frame of the meter. If, because of the shape or configuration of that portion of the #sign#, the entire portion cannot be viewed within the viewing frame, readings may be taken of discrete sections of that portion separately, provided, however, that no more of the portion than is absolutely necessary to measure the entire portion, may be included in more than one such reading. Readings of sections of that portion of the #sign# shall be averaged to obtain the average illumination level of the entire portion.

If the illumination of a required #sign# or portion thereof is measured prior to its installation on the #building#, all measurements shall be taken in an interior environment with an ambient air temperature of between 65 and 75 degrees Fahrenheit and no ambient light. For all readings, the LUTS meter shall be located so that its relationship to the #sign# or portion thereof is identical to that described below for taking measurements when the same #sign# or portion thereof is installed on the #building#.

If the illumination of a required #sign# or portion thereof is measured after its installation on the #building#, all measurements shall be taken at night when the ambient air temperature, at a height above #street# level equal to that of the center of the #sign#, is between 65 and 75 degrees Fahrenheit. To measure the illumination level of a #sign# or portion thereof, an imaginary line shall be established which is perpendicular in plan view to the surface of the #sign# or portion thereof and connects its center to a point from which the #sign# or portion thereof is actually visible and which is five feet above #street# level and 60 or more feet away from the #sign#. The LUTS meter shall be located along this line at the furthest distance from the #sign# or portion thereof at which a reading may be obtained by the method specified above.

The duration of one complete operating cycle of any #sign# required under this paragraph (a)(3) which is animated, in whole or in part, shall not exceed five minutes.

During any one complete operating cycle of any such #sign#, the aggregate time for which such #sign# is unlit shall not exceed 10 percent of the operating cycle and in no case shall exceed 15 seconds. In addition, no single continuous time period during which such a #sign# is unlit shall exceed three seconds. During any one complete operating cycle of any such #sign#, the brightness levels specified below in paragraphs (a)(3)(iii) and (iv) shall be attained for an aggregate time of not less than 20 percent of the operating cycle and in no case shall be less than l0 seconds. In addition, the #surface area# of any #sign# required to be continuously animated, either in whole or in part and either electrically or mechanically, shall exhibit visual changes clearly discernable by an observer at #street# level at intervals not exceeding 30 seconds.

(iii) A minimum of 25 percent of the required minimum aggregate #surface area# of #signs# required under this paragraph, (a)(3), shall comprise #signs# each of which shall attain for a minimum of 25 percent of its #surface area# at least 1.5 LUTS incident illumination measured as specified in this paragraph, (a)(c), by means of electric lamps, such as neon tubes, incandescent lamps or cathode ray tubes, which are exposed directly to view. All of the remainder of each such #sign# shall attain at least 0.2 LUTS incident illumination measured as specified by means of electric lamps exposed directly to view and/or luminous surfaces comprising translucent material lit from behind by electric lamps.

In addition, each of the #signs# required to meet the standards of this paragraph (a)(3)(iii) shall have either: a minimum of 20 percent of its #surface area# continuously electrically animated either by means of flashing borders, writing, pictorial representations, emblems or other figures of similar character or by means of #flashing

sign# #surface area# serving as a field or background thereto; or, a minimum of 50 percent of its #surface area# continuously mechanically animated.

(iv) In addition, a minimum of 25 percent of the required minimum aggregate #surface area# of #signs# required under this paragraph (a)(3) shall comprise #signs# each of which shall attain for all of its #surface area# at least 0.4 LUTS incident illumination measured as specified by means of luminous surfaces comprising translucent material lit from behind by electric lamps. Alternatively, but also in addition to paragraph (a)(3)(iii) of this Section, a minimum of 25 percent of the required minimum aggregate #surface area# of #signs# required under this paragraph (a)(3) shall achieve the same incident illumination levels for the same amounts of #surface area# as specified in paragraph (a)(3)(iii).

In addition, each of the #signs# required to meet the standards of this paragraph (a)(3)(iv) shall have either: a minimum of 20 percent of its #surface area# continuously electrically animated either by means of flashing borders, writing, pictorial representations, emblems or other figures of similar character or by means of #flashing sign# #surface area# serving as a field or background thereto; or, a minimum of 50 percent of its #surface area# continuously mechanically animated.

(v) The provisions of paragraphs (a)(3)(iii) and (iv) of this Section may be modified or waived upon certification by the Chairperson of the City Planning Commission that the dynamic character and attractiveness of the #sign# or #signs# for which the modification or waiver is granted are assured by the proposed design and operation and that the signage on the #zoning lot# will produce an effect at least equal to that achieved through the application of paragraphs (a)(3)(iii) and (iv).

Except for an individual #sign# meeting the illumination requirements of paragraphs (a)(3)(iii) and (iv) for at least 50 percent of its #surface area#, for all of the #signs# required under this paragraph (a)(3), all #surface area# not complying with paragraphs (a)(3)(iii) and (iv) shall be lighted with an average level of illuminance across the entirety of that #surface area# of 75 foot candles and with an average to minimum illuminance ratio of not greater than 3.0 to 1.0.

(vi) For #zoning lots# that contain 15,000 square feet or more of #lot area#, the provisions of paragraphs (a)(2) and (a)(3)(ii) of this Section may be modified or waived, upon certification by the Chairperson that:

(a) the #sign# or #signs# for which the modification or waiver is granted are affixed to a #building# that contains a "listed theater" as designated in Section 81-742 (Listed theaters), and a portion of such theater is located within 100 feet of the #street line# of Seventh Avenue or Broadway; and

(b) such #sign# or #signs# provide visual interest that furthers the purposes of the #illuminated sign# requirements set forth in Section 81-73 (Special Sign and Frontage Regulations), inclusive, in a manner that is at least equal to that achieved through the application of paragraphs (a)(2) and (a)(3)(ii).

(4) One marquee #illuminated sign# and one additional projecting identification #illuminated sign# are required for each theater on a #zoning lot#. A group of motion picture theaters under single ownership and operation shall be treated as one theater for the purposes of this requirement.

Each required marquee shall have a minimum area in plan of 500 square feet and each projecting identification #sign# shall have a minimum #surface area# of 200 square feet. Marquees and identification #signs# may count towards meeting the minimum aggregate #surface area# requirements of paragraph (a)(2) or (a)(3) of this Section, provided that they comply with the locational requirements therein.

(5) #Signs# which do not meet the locational requirements of paragraph (a)(2) or (a)(3) are permitted, but shall not count towards meeting minimum aggregate #surface area# requirements.

(6) Required minimum aggregate #surface areas# of #signs# for #zoning lots# with #street# frontage on both Seventh Avenue and Broadway shall be calculated by including both those #street# frontages and any #narrow street# frontages up to the first 40 linear feet of #street# frontage from either Seventh Avenue or Broadway.

(7) All required #illuminated signs# shall at a minimum remain lit from dusk until 1:00 a.m. daily.

All of the #surface area# of #signs# required under paragraphs (a)(2) and (a)(3) shall be visible from a height of five feet above #street# level at any point 60 feet from the Seventh Avenue or Broadway #street line# of the #zoning lot# on which they are required to be provided.

At least 50 percent of the minimum aggregate #surface area# of #signs# required under paragraph (a)(3) shall comprise #signs# each of which shall be legible during daylight hours from a minimum distance of 60 feet when viewed from ground level at a point perpendicular in plan to the center of the #sign#.

(b) For #enlargements# which add #floor area# amounting to a #floor area ratio# of at least 1.0, the #sign# requirements of this Section shall apply as follows:

(1) If the #enlargement# involves an increase in #floor area#, minimum aggregate #surface areas# of required #signs# shall be determined in the same manner as for #developments# on the basis of the length of the #zoning lot's# frontage as set forth in paragraphs (a)(2), (a)(3) and (a)(6) of this Section.

(2) All other requirements for #signs# required for #enlargements# shall be as provided for #developments# in paragraphs (a)(1), (a)(2), (a)(3), (a)(4), (a)(5) and (a)(7) of this Section.

(3) The provisions of paragraphs (a)(1) or (a)(2) may be modified or waived upon certification by the Chairperson of the City Planning Commission that such modification or waiver results from compelling necessity.

(c) #Zoning lots# between 43rd and 50th Streets with #street# frontage on Seventh Avenue and/or Broadway comprising #developments# or #enlargements# and existing #buildings# to remain shall meet the requirements of paragraph (a) of this Section for #developments# or paragraph (b) for #enlargements# on the basis of the configuration and #street# frontages of the entire #zoning lot#.

There shall be no reduction in the aggregate #surface area# of #signs# on any existing #buildings# to remain. A #non-conforming# #sign# may be structurally altered, reconstructed or replaced in the same location and position, provided that such structural alteration, reconstruction or replacement does not result in the creation of a new #non-conformity# or an increase in the degree of #non-conformity# of such #sign#.

81-733 - Special provisions for central refuse storage area

LAST AMENDED
2/2/2011

For all #buildings# or portions of #buildings# #developed# or #enlarged# after May 13, 1982, located within the Theater Subdistrict, facilities shall be provided for central refuse storage within the #building#, and no refuse shall be stored outside the #building#.

In all cases there shall be an area for central refuse storage provided at the rate of 75 square feet for non-compressed refuse or 50 square feet for compressed refuse for each 10,000 square feet of #lot area#. Such area shall be ventilated.

For carting purposes, such central storage area shall be directly accessible on a 24-hour basis to loading berths, where provided, or to the exterior of the #building#. Furthermore, the central storage area shall be accessible at all times to all #uses# occupying space within the #building#.

Such area shall be exempt from calculations for #floor area# as defined in Section 12-10 (DEFINITIONS).

81-734 - Special signage regulations for portions of the west side of Eighth Avenue

LAST AMENDED
10/31/2017

For a #corner lot#, or portions thereof, bounded by two #wide streets# on the west side of Eighth Avenue within the Eighth Avenue Corridor of the Theater Subdistrict, the #sign# provisions for C6-7 Districts pursuant to Section 32-60 (SIGN REGULATIONS) shall apply only to such #corner lot# portion, with the following modifications:

(a) no #sign# shall function with sound; and

(b) #illuminated signs# may face both #wide streets#, or be parallel to the #street line# of one #wide street#.

81-74 - Special Incentives and Controls in the Theater Subdistrict

LAST AMENDED
5/13/1982

81-741 - General provisions

LAST AMENDED
2/2/2011

(a) Certifications

(1) The transfer of development rights from any "granting site" in accordance with the provisions of Section 81-744 (Transfer of development rights from listed theaters) shall be permitted upon certification by the City Planning Commission.

(2) In the Theater Subdistrict, modifications of the provisions of Article VII, Chapter 7 (Special Provisions for Zoning Lots Divided by District Boundaries), in accordance with the provisions of Section 81-746 (Additional provisions for zoning lots divided by district or subdistrict core boundaries), shall be permitted upon certification of the Chairperson of the Commission.

(b) Authorizations by the City Planning Commission

The transfer of development rights from any "granting site" in accordance with the provisions of paragraph (b) of Section 81-744 shall be permitted by authorization by the Commission.

(c) Special permit by the City Planning Commission

In the Theater Subdistrict, the Commission may allow, by special permit:

(1) demolition of a theater where permissible under the provisions of Section 81-742 (Listed theaters);

(2) a #floor area# bonus for rehabilitation of an existing theater in accordance with the provisions of Section 81-745 (Floor area bonus for rehabilitation of existing listed theaters); and

(3) transfer of development rights from a #zoning lot# occupied by a theater that is a designated landmark in accordance with the provisions of Section 81-747 (Transfer of development rights from landmark theaters).

(d) Additional #floor area# bonuses

All #developments# or #enlargements# located on the west side of Eighth Avenue between 42nd and 45th Streets within the Theater Subdistrict may receive an increase in #floor area# pursuant to Section 96-22 (Special Regulations for Eighth Avenue Perimeter Area) for those #developments# or #enlargements# complying with the provisions of Section 23-90 (INCLUSIONARY HOUSING).

(e) Required assurances

All special permits, authorizations or certifications involving preservation of existing theaters shall be subject to the provisions of Section 81-743 (Required assurances for continuance of legitimate theater use).

(f) Limits on total additional #floor area#

Except as otherwise provided in Section 81-212 (Special provisions for transfer of development rights from landmark sites), the total additional #floor area# permitted on the #zoning lot# by such special permit, authorization or certification, together with all bonus #floor area# or #floor area# derived from transferred development rights under other provisions of this Chapter, shall in no event exceed the maximum amount permitted by certification, authorization or special permit as set forth in Section 81-211 (Maximum floor area ratio for non-residential or mixed buildings).

(g) Limitations on non-theater-related bonuses in C6-4, C6-5 or M1-6 Districts

For #zoning lots# or portions thereof in C6-4, C6-5 or M1-6 Districts, the total amount of #floor area# derived from non-theater-related bonuses or other special #floor area# allowances, pursuant to provisions of this Chapter other than those in Sections 81-744, 81-745, 81-746 or 81-747, shall not exceed a #floor area ratio# of 2.0.

(h) Theater-related bonus #floor area# for #residences# in C6-4 and C6-5 Districts

For #zoning lots# or portions thereof in C6-4 or C6-5 Districts, some or all of the bonus #floor area# or other special #floor area# allowances permitted pursuant to the provisions of Sections 81-744, 81-745, 81-746 or 81-747, relating to the preservation or rehabilitation of existing theaters, may be allocated to a #residential building# or the #residential# portion of a #mixed building#, provided that the total #residential# #floor area ratio# with such #floor area# allowances shall not exceed 12.0.

(i) Theater Subdistrict Fund

In furtherance of the purposes of this Section, the Theater Subdistrict Council shall establish a separate interest-bearing account (the "Theater Subdistrict Fund" or "Fund") for the deposit and administration of the revenues received by the Theater Subdistrict Council generated by the transfer of development rights pursuant to Section 81-744. Upon receipt of any revenue generated pursuant to such Section, the Theater Subdistrict Council shall notify the Comptroller, the Speaker and the Department of City Planning, and promptly deposit such revenues into the Theater Subdistrict Fund and shall expend such revenues and any interest accumulated thereon in the following manner:

(1) a portion of any such revenues shall be reserved, sufficient in the judgment of the Theater Subdistrict Council but in no event less than 20 percent of such revenues, to undertake the ongoing periodic inspection and maintenance report requirements pursuant to paragraph (c) of Section 81-743. The Theater Subdistrict Council may petition the City Planning Commission for a reduction in the percentage of such reserve and the Commission may grant such reduction if, in its judgement, a lesser percentage will be sufficient to carry out the purposes of this paragraph; and

(2) the remainder of such revenue shall be used for activities chosen by the Theater Subdistrict Council furthering the objectives and purposes of this Section, which activities may include judicial or administrative proceedings instituted by the Theater Subdistrict Council against any property owner or lessee to enforce the obligations of such owner or lessee pursuant to any restrictive declaration entered into in connection with a transfer of development rights pursuant to Section 81-744. Notwithstanding the foregoing, funds shall not be used for the physical repair and preservation of theaters.

The Theater Subdistrict Council shall provide an annual report to the Department of City Planning, the Comptroller, the Speaker and the City Planning Commission indicating the amounts and dates of any deposits to the Theater Subdistrict Fund in the immediately preceding calendar year, the balance of the Theater Subdistrict Fund at the close of the calendar year, the amounts expended on activities within the Theater Subdistrict and the nature of those activities. The Theater Subdistrict Council shall maintain complete, accurate and detailed records, with supporting documentation, in respect to all deposits to and withdrawals from the Theater Subdistrict Fund, and shall make such records available to the City of New York, the Department of City Planning, the Comptroller, the Speaker and the City Planning Commission upon reasonable notice and during business hours for inspection and copying.

81-742 - Listed theaters

LAST AMENDED
2/2/2011

(a) Designation of listed theaters

"Listed theaters" are theaters to which special provisions of this and other Sections as set forth in 81-741 (General provisions) apply, and are predominantly free-standing theaters with full stage and wings. The theaters as identified on August 6, 1998, in the table in this Section, are designated as "listed theaters."

LISTED THEATERS

Theater Name	Address	Block Number	Lot Number
Ambassador	215 West 49th St.	1021	15
Barrymore	243 West 47th St.	1019	12
Belasco	111 West 44th St.	997	23
Biltmore	261 West 47th St.	1019	5
Booth	222 West 45th St.	1016	15
Broadhurst	235 West 44th St.	1016	11
Broadway	1681 Broadway	1024	46
Brooks Atkinson	256 West 47th St.	1018	57
City Center	131 West 55th St.	1008	15
Cort	138 West 48th St.	1000	49
Ed Sullivan	1697 Broadway	1025	43
*Empire	236 West 42nd St.	1013	50
Eugene O'Neill	230 West 49th St.	1020	53
Forty-Sixth St.	226 West 46th St.	1017	48
Golden	252 West 45th St.	1016	58

*Harris	226 West 42nd St.	1013	45
Helen Hayes	240 West 44th St.	1015	51
Henry W. Miller	124 West 43rd St.	995	45
Hudson	139 West 44th St.	997	15
Imperial	249 West 45th St.	1017	10
*Liberty	234 West 42nd St.	1013	49
Longacre	220 West 48th St.	1019	50
Lunt-Fontanne	205 West 46th St.	1018	20
Lyceum	149 West 45th St.	998	8
*Lyric	213 West 42nd St.	1014	39
Majestic	245 West 44th St.	1016	5
Mark Hellinger	237 West 51st St.	1023	11
Martin Beck	302 West 45th St.	1035	37
Music Box	239 West 45th St.	1017	11
Nederlander	208 West 41st St.	1012	30
Neil Simon	250 West 52nd St.	1023	54
*New Amsterdam	214 West 42nd St.	1013	39
*New Amsterdam-Roof Garden	214 West 42nd St.	1013	39
*New Apollo	234 West 43rd St.	1014	20
Palace	1564 Broadway	999	63

Plymouth	236 West 45th St.	1016	51
Ritz	225 West 48th St.	1020	14
Royale	242 West 45th St.	1016	55
St. James	246 West 44th St.	1015	54
*Selwyn	229 West 42nd St.	1014	17
Shubert	225 West 44th St.	1016	15
Studio 54	254 West 54th St.	1025	58
*Times Square	219 West 42nd St.	1014	20
*Victory	209 West 42nd St.	1014	25
Virginia	245 West 52nd St.	1024	7
Winter Garden	1634 Broadway	1022	2

* Indicates theaters which do not qualify as a "granting site" pursuant to Section 81-744

In the case of an existing legitimate theater that received a #floor area# bonus pursuant to regulations in effect prior to May 13, 1982, no provisions of this amendment shall be construed as changing any previously existing responsibility of the owner or lessee of such theater for continuance of its #use# as a legitimate theater.

(b) Restrictions on demolition of listed theaters

No demolition permit shall be issued by the Department of Buildings for any theater listed in this Section as a "listed theater," unless:

(1) it is an unsafe #building# and demolition is required pursuant to the provisions of Title 28, Article 216 of the New York City Administrative Code;

(2) it has been designated a landmark by the Landmarks Preservation Commission and a notice to proceed has been issued to the owner pursuant to Section 25-309 of Title 25, Chapter 3, of the New York City Administrative Code permitting demolition that contemplates removal of the theater from theater #use#; or

(3) the City Planning Commission, by special permit, allows its demolition in accordance with the provisions of paragraph (c) of this Section.

(c) Special permit for demolition of listed theaters

The City Planning Commission may allow, by special permit, the demolition of a theater designated as a "listed theater" pursuant to this Section, provided the Commission finds that the demolition of the theater structure will not unduly diminish the character of the Theater Subdistrict as a cultural, entertainment and theatrical showcase. In making this determination, the Commission may

consider any or all of the following:

(1) the current physical characteristics of the theater that affect its suitability as a legitimate theater, including but not limited to seating capacity, configuration and location;

(2) the history of the theater's #use# as a legitimate theater, presenting legitimate attractions to the general public;

(3) the likelihood of its future #use# for legitimate theater production under reasonable terms and conditions prevailing in the theater industry; and/or

(4) that the applicant's plans, if any, for replacement of the theater structure with a #development# or #enlargement# contain replacement #uses# supportive of the character of the Theater Subdistrict.

As a condition of the special permit, there shall exist a legal commitment binding upon all parties in interest of the #zoning lot# containing the theater that any #development# or #enlargement# on a #zoning lot# containing a portion or all of the former site of the "listed theater", that floor space at least equivalent in amount to the total #floor area# of the theater shall be reserved or devoted exclusively to #uses# described in Section 81-725 (Entertainment-related uses) and meeting the requirements of paragraphs (b) and (c) of Section 81-724 (Requirements for entertainment-related uses) for the life of such #development# or #enlargement#. Notwithstanding the foregoing, if the area of the #zoning lot# containing the theater is less than 20,000 square feet and the Commission finds that the allocation of floor space at least equivalent in amount to the total #floor area# of the theater to #uses# described in Section 81-725 is impractical or unreasonable, the Commission may permit a reduction in the amount of area allocated to such #uses#.

Any #development# or #enlargement# on a #zoning lot# containing a portion or all of the former site of a "listed theater" must, however, meet the requirements of paragraphs (b) and (c) of Section 81-724 whether or not the #zoning lot# is located within the area described in that Section.

81-743 - Required assurances for continuance of legitimate theater use

LAST AMENDED
10/7/2021

Prior to the issuance of any special permit under the provisions of Sections 81-745 (Floor area bonus for rehabilitation of existing listed theaters) or 81-747 (Transfer of development rights from landmark theaters), or the issuance of a certification, authorization or special permit under the provisions of Sections 66-51 (Additional Floor Area for Mass Transit Station Improvements), 81-744 (Transfer of development rights from listed theaters), or 81-746 (Additional provisions for zoning lots divided by district or subdistrict core boundaries) the following conditions shall exist:

(a) a signed lease from a prospective theater operator, or a written commitment from the owner of the theater if such owner is also the operator, for occupancy of the theater and its operation as a legitimate theater for a period of not less than five years;

(b) a licensed engineer's and/or architect's report certifying either that the theater is physically and operationally sound so as to permit its use as a legitimate theater or, if it is determined that the theater is not physically or operationally sound, a plan and program for the upgrade of the theater to put it in condition of physical and operational soundness. For the purposes of this Section, physical and operational soundness shall include the structural integrity of the exterior and interior elements of the #building# to the extent that they relate to the theater, compliance with applicable electrical and fire safety codes, and compliance with applicable building code standards.

In the event that the theater has been designated as a landmark or an interior landmark by the Landmarks Preservation Commission, physical and operational soundness shall include preserving the integrity of existing significant architectural features identified in the Landmarks Preservation Commission designation report. In such case, a licensed engineer and/or architect with knowledge of historic preservation and credentials acceptable to the Landmarks Preservation Commission shall prepare a report documenting the condition of such significant architectural features and, if determined to be necessary, a plan and program to preserve such significant features in a state of good physical repair and sound proper condition. Any certification report regarding a landmark or interior landmark theater shall be submitted concurrently to the Landmarks Preservation Commission and the

Chairperson of the City Planning Commission;

(c) A plan and program shall be accompanied by written commitment from such owner of the financial resources available to ensure timely completion of the identified scope of work;

(d) a legal commitment providing for inspection and ongoing maintenance of the theater to ensure its continued availability for theater use. Such inspection shall be conducted every five years by a licensed engineer and/or architect or by the Theater Subdistrict Council, and a report issued to the Chairperson of the City Planning Commission and notice of such report shall be published in the City Record. Such report shall also be issued to the Theater Subdistrict Council unless the Theater Subdistrict Council has performed such inspection, and, in the event the theater has been designated a landmark or an interior landmark, such report shall also be issued to the Landmarks Preservation Commission and notice of such report shall be published in the City Record. Such reports shall describe the condition of the theater and identify any maintenance or repair work necessary to ensure the physical and operational soundness of the theater and to maintain the condition of any landmark architectural features and establish a plan and program for such work, including providing that adequate resources be made available to ensure timely completion of such maintenance or repair work; and

(e) a legal commitment for continuance of its #use# as a legitimate theater for the life of the related #development# or #enlargement#.

Such legal commitments shall be in the form of a declaration of restrictions, filed and duly recorded in the Borough Office of the Register of the City of New York, binding upon the owner, lessee of the theater and their successors and assigns, a certified copy of which shall be submitted to the City Planning Commission. The filing of such declaration and the posting of any bond or other security required by the declaration and receipt of such certified copy shall be preconditions to issuance of any building permit, including any foundation or alteration permit, for any #development# or #enlargement# on the receiving site.

81-744 - Transfer of development rights from listed theaters

LAST AMENDED
2/2/2011

For the purposes of the Theater Subdistrict:

A “listed theater” shall mean a theater designated as listed pursuant to Section 81-742 (Listed theaters).

A “granting site” shall mean either a #zoning lot# or that portion of a #zoning lot# occupied by a “listed theater” and comprised of those block and lot numbers specified for such theater pursuant to the table in Section 81-742, as such block and lots existed on January 12, 1998. However, a “granting site” shall not include any #zoning lot# occupied by a “listed theater” located within the geographical area covered by the 42nd Street Development Land Use Improvement Project, adopted by the New York State Urban Development Project in 1984, as such Project has and may be subsequently amended.

A “receiving site” shall mean a #zoning lot# or the portion of a #zoning lot# located within the Theater Subdistrict to which development rights of the “granting site” are transferred. However, no portion of a “receiving site” shall be located within the 42nd Street Development Project Area. In addition, for #zoning lots# containing “listed theaters,” that portion of the #zoning lot# occupied by the “listed theater” and comprised of the block and lot numbers specified for such theater, pursuant to the table in Section 81-742, shall not be included in the “receiving site.”

Any “receiving site” divided by a district boundary or Theater Subdistrict Core boundary may locate #bulk# in accordance with the provisions of Section 81-746 (Additional provisions for zoning lots divided by district or subdistrict core boundaries).

(a) Transfer of development rights by certification

The City Planning Commission shall allow, by certification, a transfer of development rights from a “granting site” to a “receiving site,” except that any “granting site,” or portion thereof, located outside the Theater Subdistrict, may not transfer development rights to any portion of a “receiving site” within the Special Clinton District, provided that:

(1) the maximum amount of #floor area# transferred from a “granting site” is the basic maximum #floor area ratio# established pursuant to Sections 81-211 (Maximum floor area ratio for non-residential or mixed buildings) or 81-213 (Special provisions for transfer of development rights from listed theaters within the Special Clinton District), as applicable, for such “granting site” as if it were undeveloped, less the total #floor area# of all existing #buildings# or portions of #buildings# on the “granting site” and #floor area# attributed to the “granting site” that has been previously used or transferred;

(2) each transfer, once completed, irrevocably reduces the amount of #floor area# that may be #developed# or #enlarged# on the #zoning lot# containing the “granting site” by the amount of #floor area# transferred;

(3) the maximum amount of #floor area# transferred to a “receiving site” shall not exceed the basic maximum #floor area ratio# established pursuant to Section 81-211 for such “receiving site” by more than 20 percent;

(4) the provisions of Section 81-743 (Required assurances for continuance of legitimate theater use) are met; and

(5) appropriate legal documents are executed ensuring that a contribution in an amount equal to 10 dollars* per square foot of transferred #floor area# be deposited in the Theater Subdistrict Fund established pursuant to paragraph (i) of Section 81-741 (General provisions) at the earlier of either the time of closing on the transfer of development rights pursuant to this Section or the filing for any building permit for any #development# or #enlargement# that anticipates using such development rights.

The Commission shall review such amount no more than once every three years and no less than once every five years and shall adjust the amount to reflect any change in assessed value of all properties on #zoning lots# wholly within the Theater Subdistrict.

(b) Transfer of development rights by authorization

The City Planning Commission shall allow, by authorization, an additional transfer of development rights beyond the amount of #floor area# transfer permitted by certification in paragraph (a) of this Section from a "granting site" to any portion of a “receiving site” located within the Eighth Avenue Corridor, except that any “granting site,” or portion thereof, located outside the Theater Subdistrict may not transfer development rights to any portion of a “receiving site” within the Special Clinton District, subject to the following conditions:

(1) the maximum amount of such additional #floor area# transfer to that portion of a "receiving site" located within such Corridor shall not exceed the maximum total #floor area ratio# with as-of-right #floor area# allowances in the Theater Subdistrict set forth in Section 81-211 by more than 20 percent; and

(2) such transfer complies with the conditions and limitations set forth for the transfer of development rights in paragraph (a) of this Section.

In order to grant such authorization, the Commission shall find that such #development# or #enlargement#:

(i) relates harmoniously to all structures and #open space# in its vicinity in terms of scale, location and access to light and air in the area; and

(ii) serves to enhance or reinforce the general purposes of the Theater Subdistrict.

Any application pursuant to paragraphs (a) and/or (b) of this Section shall be referred to the affected Community Board, the local Council Member and the Borough President of Manhattan. The Commission shall not grant any such certification or authorization prior to sixty days after such referral and sixty days after the date any reports required to be submitted to the

Landmarks Preservation Commission pursuant to Section 81-743, paragraph (b), or the Theater Subdistrict Council pursuant to Section 81-71 (General Provisions) have been so submitted.

(c) Requirements for Application

An application filed with the Chairperson of the City Planning Commission for the transfer of development rights by certification pursuant to paragraph (a) of this Section, or with the City Planning Commission for the transfer of development rights by authorization pursuant to paragraph (b) of this Section, shall be made jointly by the owners of the "granting site" and the "receiving site" and shall include:

(1) a site plan and #floor area# zoning calculations for the "granting site" and the "receiving site" and, for authorizations and/or special permit applications, any such other information as may be required by the Commission;

(2) a copy of the transfer instrument legally sufficient in both form and content to effect such a transfer, together with a notice of the restrictions limiting further #development# or #enlargement# of the "granting site" and the "receiving site." The notice of restrictions shall be filed by the owners of the respective lots in the Borough Office of the Register of the City of New York, indexed against the "granting site" and the "receiving site," a certified copy of which shall be submitted to the Chairperson. Receipt of the certified copy shall be a pre-condition to issuance of any building permit, including any foundation or alteration permit, for any #development# or #enlargement# on the "receiving site."

Both the instrument of transfer and the notice of restrictions shall specify the total amount of #floor area# transferred and shall specify, by lot and block numbers, the lots from which and the lots to which such transfer is made.

(3) demonstrations of compliance with the requirements of Section 81-743 and paragraph (a)(5) of this Section, including all necessary legal documents. Issuance of any building permit, including any foundation or alteration permit, shall be conditioned upon the filing of such legal documents in the Borough Office of the Register of the City of New York and receipt by the Commission of certified copies of same as required pursuant to Section 81-743.

A separate application shall be filed for each transfer of development rights to an independent "receiving site."

* The contribution of 10 dollars per square foot of transferred #floor area# was adjusted by rule on November 15, 2006, to $14.91 per square foot; on December 10, 2011, to $17.60 per square foot; and on July 15, 2022, to $24.65 per square foot

81-745 - Floor area bonus for rehabilitation of existing listed theaters

LAST AMENDED
2/2/2011

The City Planning Commission by special permit may authorize bonus #floor area# for substantial rehabilitation or restoration of any theater listed as a "listed theater" in Section 81-742 (Listed theaters), in accordance with the provisions of this Section.

(a) Conditions for rehabilitation bonus

As a condition for the issuance of a special permit under the provisions of this Section, the following requirements shall be satisfied:

(1) Location of #development#

The #development# or #enlargement# for which a theater rehabilitation bonus is granted is located on the same #zoning lot# as the "listed theater."

(2) Qualification of substantial rehabilitation

Substantial rehabilitation work qualifying for a #floor area# bonus shall consist of major structural changes for the purpose of improving a theater's design and its commercial viability for legitimate theater #use#, or historic restoration of the

interior of a theater designated as an interior landmark.

Substantial rehabilitation may include, without limitations, such work as expanding stage wings, re-raking the orchestra, increasing rehearsal, dressing room or lobby and ancillary spaces, improving accessibility beyond applicable legal requirements, or historic restoration. It may also include reconversion to legitimate theater #use# of an original legitimate theater currently in other #use#. Substantial rehabilitation does not mean normal theater maintenance, painting or improvements to mechanical systems alone.

(3) Timing and commitment

(i) there shall be a contractual commitment or commitments for the construction work involved in the substantial rehabilitation;

(ii) the requirements of Section 81-743 (Required assurances for continuance of legitimate theater use) shall be satisfied; and

(iii) a rehabilitation bonus shall not be granted for a substantial rehabilitation completed before May 13, 1982.

(b) Amount of rehabilitation bonus

The amount of bonus #floor area# granted for a qualifying theater rehabilitation shall be at the discretion of the Commission after consideration of the following findings:

(1) how and to what extent the proposed rehabilitation will improve the theater's suitability for #use# as a legitimate theater;

(2) how the proposed rehabilitation will contribute toward satisfying the needs of the Theater Subdistrict;

(3) whether the bonus #floor area# will unduly increase the #bulk# of any #development# or #enlargement#, density of population or intensity of #use# on any #block# to the detriment of occupants of #buildings# on the #block# or the surrounding area; and

(4) whether the distribution and location of such #floor area# bonus will adversely affect the surrounding area by restricting light and air or otherwise impair the essential character or future development of the surrounding area.

Such bonus #floor area# shall not exceed 20 percent of the basic maximum #floor area# permitted on the #zoning lot# containing the #development# or #enlargement# by the regulations of the underlying district, except that in the case of an underlying C6-4, C6-5 or M1-6 District, the bonus #floor area# shall not exceed 44 percent of the basic maximum #floor area# permitted in such underlying district, and except that in the case of a #zoning lot# located partially in a C6-5.5 District and partially in a C6-7T District, the Commission may allow bonus #floor area# to be utilized anywhere on the #zoning lot#.

For purposes of applying the provisions of Section 11-42 (Lapse of Authorization or Special Permit by the City Planning Commission Pursuant to the 1961 Zoning Resolution) to a special permit granted pursuant to this Section, “substantial construction” shall mean substantial rehabilitation, as described in paragraph (b) of this Section, of the subject theater for which a #floor area# bonus has been granted to a related #development# or #enlargement#.

The Commission may prescribe appropriate conditions and safeguards to minimize adverse effects on the character of the surrounding areas.

81-746 - Additional provisions for zoning lots divided by district or subdistrict core boundaries

LAST AMENDED
2/2/2011

(a) For any #zoning lot# which includes a “listed theater” as set forth in Section 81-742 (Listed theaters) or is, or contains, a “receiving site” pursuant to Section 81-744 (Transfer of development rights from listed theaters), and which is divided by a boundary between districts with different basic maximum #floor area ratios# as set forth in Section 81-211 (Maximum floor area ratio for

non-residential or mixed buildings), the Chairperson of the City Planning Commission, by certification, shall allow modifications of the provisions of Sections 77-02 (Zoning Lots Not Existing Prior to Effective Date or Amendment of Resolution), 77-21 (General Provisions), 77-22 (Floor Area Ratio) and 77-25 (Density Requirements), as follows.

For any #zoning lot#, #floor area#, #dwelling units# or #rooming units# permitted by the applicable district regulations on either side of the district boundary may be located on the other side of the district boundary, provided:

(1) the amount of such #floor area# to be located on either side of the district boundary shall not exceed 20 percent of the basic maximum #floor area ratio# of the district in which it is to be located;

(2) the number of such #dwelling units# or #rooming units#, if any, to be located on either side of the district boundary shall not exceed the number permitted by the applicable district regulations; and

(3) the provisions of Section 81-743 (Required assurances for continuance of legitimate theater use) are met for any "listed theater" on such #zoning lot#.

The Chairperson's certification approving modification of the provisions for such #zoning lots# divided by district boundaries shall state the total amount of #floor area#, including #floor area# of any existing theater, to be provided on the #zoning lot# as a whole and the portion thereof to be located in each district, and the amount authorized herein to be located across the district boundary from the district in which the theater is located.

Notice of the restrictions upon further development of each portion of the #zoning lot# shall be recorded by the owner against the #zoning lot# in the Office of the Register of the City of New York (County of New York) and a certified copy shall be submitted to the Commission.

(b) Notwithstanding any other provisions of this Resolution, for any #zoning lot# which is divided by a boundary of the Theater Subdistrict Core as defined in Section 81-71 (General Provisions) and for which the basic maximum #floor area ratio# as set forth in Section 81-211 is the same for both the portion within and the portion outside of the Theater Subdistrict Core, the applicable underlying #bulk# regulations shall be modified, as follows:

(1) #floor area#, including bonus #floor area#, or #dwelling units# permitted by the applicable district regulations on that portion of the #zoning lot# within the Theater Subdistrict Core may be located on the portion of the #zoning lot# outside the Core, provided that the number of such #rooms#, if any, to be located outside of the Core shall not exceed the number permitted by the applicable district regulations; and

(2) #floor area#, including bonus #floor area#, or #dwelling units# permitted by the applicable district regulations on that portion of the #zoning lot# outside of the Theater Subdistrict Core shall not be located on the portion of the #zoning lot# within the Core.

(c) Notwithstanding any other provisions of this Resolution, for any #zoning lot# located wholly within the Theater Subdistrict and outside of the Theater Subdistrict Core that is divided by a boundary of the Eighth Avenue Corridor as defined in Section 81-71 and for which the basic maximum #floor area ratio# as set forth in Section 81-211 is the same for both the portion within and the portion outside of the Eighth Avenue Corridor, #floor area#, including bonus #floor area#, or #dwelling units# permitted by the applicable district regulations may be located on either side of the Eighth Avenue Corridor boundary.

81-747 - Transfer of development rights from landmark theaters

LAST AMENDED
2/2/2011

The City Planning Commission by special permit may authorize development rights to be transferred from #zoning lots# occupied by landmark #buildings# to other #zoning lots# proposed for #developments# or #enlargements# in accordance with the provisions of Section 74-79 (Transfer of Development Rights From Landmark Sites), as modified by this Section and by Section 81-212 (Special provisions for transfer of development rights from landmark sites).

The limitations on development rights transferred to #development# sites from landmark sites, including sites of landmark theaters, are set forth in Section 81-212.

In the case of landmarks which are theaters and which are located in the Theater Subdistrict, in addition to the modifications set forth in Section 81-212, the provisions of Section 74-79 are modified as follows:

(a) "Landmark buildings" shall include #buildings# which contain interior landmarks as well as #buildings# which are themselves landmarks.

(b) In all underlying districts throughout the Theater Subdistrict, "adjacent lots" to which landmark theaters' development rights may be transferred shall be construed to include a contiguous lot or one which is across a #street# and opposite to another lot or lots which, except for the intervention of #streets# or #street# intersections, form a series extending to the lot occupied by the landmark #building#, all such lots being in the same ownership, fee ownership or ownership as defined under #zoning lot# in Section 12-10 (DEFINITIONS).

(c) The provisions of paragraph (c) of Section 74-792 (Conditions and limitations) are further modified to provide that in any underlying district within the Theater Subdistrict, the "adjacent lot" may be #developed# or #enlarged# with either a #commercial building# or a #mixed building#.

Where development rights are proposed to be transferred and exercised in accordance with the provisions of Section 74-79, as modified by this Section, the Commission, in addition to the findings required in paragraph (e) of Section 74-792, shall find that:

(1) the series of intervening lots in common ownership leading to the "adjacent lot" include lots, identified by the Commission, which are occupied by "listed theaters" or by #uses# which directly support neighborhood theater business, such as, but not limited to, rehearsal space, recording facilities or theater costume rental facilities and that such #uses# will be continued or replaced by other legitimate theaters or theater supportive #uses# as evidenced by covenants binding the owners of such lots, their successors and assigns to provide for such continuation or replacement; or

(2) useful circulation improvements or other public facilities will be provided and maintained on one or more of the lots comprising the series of intervening lots to accommodate pedestrian or vehicular traffic generated by legitimate theaters.

The Commission shall require the owner of any intervening lot on which special #use# restrictions are applicable or on which circulation improvements or other public facilities are to be provided and maintained to sign a written declaration of restrictions setting forth the obligations of the owner, his successors and assigns and providing a performance bond for the completion of any required improvements. The declaration of restrictions shall be recorded in the Office of the Register of the City of New York (County of New York) and the Commission shall be provided with a certified copy.

The provision of Section 74-79 empowering the Commission to grant variations in the front height and setback regulations is modified by the provisions of Sections 81-266 or 81-277 (Special permit for height and setback modifications).

Compliance with the provisions of Section 81-743 (Required assurances for continuance of legitimate theater use) shall be a condition for issuance of a special permit under the provisions of this Section.

81-75 - Special Street Wall and Setback Requirements

LAST AMENDED
8/6/1998

#Buildings# located on #zoning lots#, or portions of #zoning lots# within the Theater Subdistrict Core or the Eighth Avenue Corridor, shall comply with the regulations of this Section. The height of all #buildings or other structures# shall be measured from #curb level#.

81-751 - Special street wall and setback regulations within the Theater Subdistrict Core

LAST AMENDED
2/2/2011

#Buildings# located on #zoning lots# between 43rd and 50th Streets with #street# frontage on Seventh Avenue and/or Broadway, or located partially within the Theater Subdistrict Core and partially within the Eighth Avenue Corridor shall comply with the requirements of this Section and, in all other respects related to height and setback, with the provisions of Sections 81-25 (General Provisions Relating to Height and Setback of Buildings), and either Section 81-26 (Height and Setback Regulations - Daylight Compensation) or 81-27 (Alternate Height and Setback Regulations - Daylight Evaluation). The #street wall# location rules of Section 81-43 shall also apply, except as modified in this Section.

With the exception of #signs# and parapets not exceeding four feet in height, no obstructions are permitted to penetrate the mandatory #street wall# height limits or setback requirements for #zoning lots# between 43rd and 50th Streets with #street# frontage on Seventh Avenue and/or Broadway set forth in this Section.

For the purposes of this Section, #signs# are permitted as exceptions to the special #street wall# and setback requirements contained herein, except that above the top of a #street wall# before setback required under this Section, no #sign# may be located closer than six feet to the Seventh Avenue or Broadway #street wall# before setback. #Signs# located below the top of a required #street wall# before setback, as defined in this Section, may project across a #street line# up to 10 feet. Marquees are not subject to the requirements of this Section.

(a) With the exception of #buildings# located on #zoning lots# between Seventh Avenue and Broadway, #buildings# located on #zoning lots# between 43rd and 50th Streets with #street# frontage on Seventh Avenue or Broadway shall meet the following requirements:

(1) The #street walls# of any #building# shall have a minimum #street wall# height before setback of 50 feet above #curb level# and a maximum #street wall# height before setback of 60 feet above #curb level# on all #street# frontages, except that:

(i) if the #zoning lot# contains a complete #wide street# #block# frontage, #wide street# #street walls# within 25 feet of the #street line# of a #narrow street# and #narrow street# #street walls# shall have a minimum #street wall# height before setback of 30 feet above #curb level#; and/or

(ii) if the #zoning lot# contains a theater listed in the table in Section 81-742 (Listed theaters) and the theater is retained as part of a #development# or #enlargement#, the maximum #street wall# height above #curb level# before setback of a #narrow street# #street wall# which is a reconstruction or replacement of an existing #narrow street# #street wall# of the theater shall be equal to the height above #curb level# of that existing theater #street wall# and the same maximum #street wall# height above #curb level# shall apply only for the width of that existing theater #street wall#.

(2) Above the required #street wall# height before setback, the #street wall# of any #building# shall be set back at least 15 feet along all #narrow street# frontages of the #zoning lot#.

(3) For #zoning lots# greater than 15,000 square feet in area:

(i) Above the required #street wall# height before setback, the #street wall# of any #building# shall be set back at least 50 feet along the Seventh Avenue or Broadway #street# frontage of the #zoning lot#.

(ii) Alternatively, above the required #street wall# height before setback, the #street wall# shall be set back at least 60 feet along the Seventh Avenue or Broadway #street# frontage of the #zoning lot#, except that a portion of the #building# at least 50 feet from the #street line# of any #narrow street# and with aggregate area per floor not exceeding 10 square feet for each linear foot of #zoning lot# #street# frontage on Seventh Avenue or Broadway may extend forward of the 60 foot #setback line#, provided that no portion is closer than 35 feet to the Seventh Avenue or Broadway #street line#.

(iii) Alternatively, if the #building# contains a "listed theater" designated pursuant to Section 81-742 and if any portion of the theater is within 100 feet of the #street line# of Seventh Avenue or Broadway, above the required #street wall# height before setback the #street wall# shall be set back at least 60 feet along the Seventh Avenue or Broadway #street# frontage of the #zoning lot#, except that a portion of the #building# with aggregate area per floor not exceeding the lesser of 4,500 square feet or 30 square feet for each linear foot of #zoning lot# #street# frontage on Seventh Avenue or Broadway, may extend forward of the 60 foot #setback line#, provided that no portion is closer than 20 feet to the Seventh Avenue or Broadway #street line#, 15 feet to the #street line# of the

#narrow street# on which the theater has frontage and 50 feet to any other #narrow street# #street line#.

In addition, one or more #signs# affixed to any such #building# may project up to 10 feet across the #street line# and rise to a height of 120 feet above #curb level#. Balconies and terraces, including railings or parapets, may be located within the required setback area behind such #signs#. For the purposes of applying the definition of #floor area# in Section 12-10, #signs# projecting across the #street line# shall not constitute an enclosure, and the requirements of Section 32-41 (Enclosure Within Buildings) shall not apply to such balconies or terraces, provided that a portion of any such balcony or terrace is used for an entertainment-related #use# listed in Section 81-725 (Entertainment-related uses) or an accessory #use#.

(4) For #zoning lots# 15,000 square feet in area or less, above the required #street wall# height before setback, the #street wall# of any #building# shall be set back at least 35 feet along the Seventh Avenue or Broadway #street# frontage of the #zoning lot#.

(5) Above the required #street wall# height before setback, a portion of any such #building# up to a height of 120 feet above #curb level# may occupy area forward of the setbacks required in paragraphs (a)(3) or (a)(4) of this Section but not closer than 20 feet to the Seventh Avenue or Broadway #street line#, provided that:

(i) 90 percent of any #narrow street# #street wall#, higher than 60 feet above #curb level# and forward of the setbacks required in paragraphs (a)(3) or (a)(4) of this Section is covered with #illuminated signs#.

(ii) In addition, 90 percent or 6,000 square feet, whichever is less, of any Seventh Avenue or Broadway #street wall# higher than 60 feet above #curb level# and forward of the setbacks required in paragraphs (a)(3) or (a)(4) of this Section is covered with #illuminated signs#.

For the purposes of this Section, a portion of a #street wall# shall be deemed to be covered with an #illuminated sign# if such #sign# obscures that portion of the #street wall# from view at #street# level at a point perpendicular in plan to the #sign# and 60 feet from the #street line# of the #narrow street# for paragraph (a)(5)(i) of this Section, and of Seventh Avenue or Broadway for paragraph (a)(5)(ii)

Neither temporary certificates of occupancy for #floor area# of the #development# or #enlargement# comprising, in aggregate, more than 50 percent of the total #floor area# of the #development# or #enlargement#, nor a first permanent certificate of occupancy for the #development# or #enlargement#, shall be issued by the Department of Buildings until all of the requirements as set forth in this Section at the time of issuance of such certificates of occupancy have been met and all #illuminated signs# required under this Section have been installed and put in operation.

(b) The #street wall# of any #building# on a #zoning lot# between 43rd and 50th Streets and between Seventh Avenue and Broadway shall have a minimum #street wall# height of 50 feet on all #street# frontages.

(c) For #zoning lots# located partially within the Theater Subdistrict Core and partially within the Eighth Avenue Corridor, the #street wall# of any #building# or portion of a #building# within the Theater Subdistrict Core shall have a minimum #street wall# height of 50 feet or the height of the #building#, whichever is less, and a maximum #street wall# height of 60 feet within 15 feet of the #narrow street# #street line#.

81-752 - Special street wall and setback regulations within the Eighth Avenue Corridor

LAST AMENDED
2/2/2011

#Buildings# on #zoning lots# located in whole or in part within the Eighth Avenue Corridor, as defined in Section 81-71, and east of Eighth Avenue, shall comply with the requirements of this Section, and except as superseded by this Section, with the provisions of Section 81-25 (General Provisions Relating to Height and Setback of Buildings), and either Section 81-26 (Height and Setback Regulations - Daylight Compensation) or 81-27 (Alternate Height and Setback Regulations - Daylight Evaluation).

#Buildings# on #zoning lots# located in whole or in part within the Eighth Avenue Corridor, as defined in Section 81-71, and west of

Eighth Avenue shall comply with the requirements of this Section. The provisions of Sections 81-25, 81-26 and 81-27 shall not apply.

The provisions of paragraphs (a) and (b) of this Section shall apply to #developments#, #enlargements# and alterations, where such alterations change the height, width or location of a #street wall#.

(a) #Street wall# location and minimum and maximum heights before setbacks

(1) On Eighth Avenue and 42nd Street, #street walls# shall extend along the entire #street# frontage of the #zoning lot# not occupied by existing #buildings# to remain, and shall rise to a minimum height of 50 feet or the height of the #building#, whichever is less. At least 70 percent of the width of such #street walls# shall be located on the #street line#, and the remaining 30 percent may be located beyond the #street line# in compliance with #residential# #outer court# regulations for #residential# portions of #buildings# and #community facility# #outer court# regulations for all other portions of #buildings#. However, within 30 feet of the intersection of two #street lines#, #street walls# shall comply with the location requirements of paragraph (a)(3) of this Section. The maximum height of #street walls# within 10 feet of the #wide street# #street line# shall be 150 feet beyond 15 feet of a #narrow street# #street line# and 85 feet within 15 feet of a #narrow street# #street line#.

(2) On a #narrow street# east of Eighth Avenue, and on a #narrow street# west of and within 100 feet of Eighth Avenue, #street walls# shall extend along the entire width of such #narrow street# frontage of the #zoning lot# not occupied by existing #buildings# to remain, and shall rise to a minimum height of 50 feet or the height of the #building#, whichever is less. At least 70 percent of the width of such #street walls# along such #narrow street# frontage shall be located on the #street line#, and the remaining 30 percent may be located beyond the #street line# in compliance with #residential# #outer court# regulations for #residential# portions of #buildings# and #community facility# #outer court# regulations for all other portions of #buildings#. However, within 30 feet of the intersection of two #street lines#, #street walls# shall comply with the location requirements of paragraph (a)(3) of this Section. The maximum height of #street walls# within 15 feet of the #narrow street# #street line# shall be 85 feet.

On a #narrow street# west of and beyond 100 feet of Eighth Avenue, the maximum height of #street walls# within 15 feet of the #narrow street# #street line# shall be 66 feet, except in accordance with paragraphs (b) or (c)(3) of this Section. However, no #street wall# need be provided where at least 70 percent of the entire frontage of the #zoning lot# along such #narrow street# is occupied by #street walls# located on the #street line#.

(3) Within 30 feet of the intersection of two #street lines#, the #street wall# shall be located on the #street line# or anywhere within an area bounded by the two #street lines# and lines parallel to and 15 feet from such #street lines#.

(4) Where a continuous sidewalk widening is provided along the entire #block# frontage of a #wide street#, the boundary of the sidewalk widening shall be considered to be the #street line# for the purposes of this Section.

(b) Special #street wall# regulations for #buildings# adjacent to listed theaters

For #buildings# that are adjacent to a theater listed pursuant to Section 81-742 (Listed theaters), the maximum height of the #street wall# of the #building# facing the same #street# as the "listed theater" shall be 60 feet within 15 feet of the #street line#.

(c) Additional regulations applying west of Eighth Avenue

(1) West of Eighth Avenue, at any level above a height of 85 feet, any #building# or #buildings# or portions thereof shall, in the aggregate, occupy not more than 40 percent of the #lot area# of the #zoning lot#, except that for #zoning lots# of less than 20,000 square feet of #lot area#, this percentage may be increased as set forth in Section 23-65 (Tower Regulations). At any level above a height of 85 feet, any #building# or #buildings# or portions thereof shall, in the aggregate, occupy not less than 33 percent of the #lot area# of the #zoning lot#, except that such minimum #lot coverage# requirement shall not apply to the highest four #stories# of the #building#.

(2) Beyond 125 feet of the western #street line# of Eighth Avenue, and beyond 100 feet of the northern #street line# of 42nd Street, no #building or other structure# shall exceed a height of 66 feet, except in accordance with paragraph (c)(3) of this Section.

(3) Where the new or #enlarged# #building# #abuts# an existing #building# located entirely beyond 125 feet of the western #street line# of Eighth Avenue and the northern #street line# of 42nd Street, and such existing #building# exceeds a height of 66 feet, the new or #enlarged# #building# may exceed any height limits specified in this Section up to the height of the existing #building#, provided that, within 15 feet of the #narrow street# #street line#, such portion of the new or #enlarged# #building# does not exceed either the height of the existing #building# or 85 feet, whichever is less. For the purposes of this paragraph, the height of the existing #building# shall be the height of its #street wall#, before setback, if applicable, of that portion of the existing #building# #abutting# the new or #enlarged# #building#, fronting on the same #street line#, and located on the same or adjoining #zoning lot#.

81-80 - SPECIAL REGULATIONS FOR FIFTH AVENUE SUBDISTRICT

LAST AMENDED
5/13/1982

81-81 - General Provisions

LAST AMENDED
10/17/2007

The regulations of Sections 81-82 to 81-85, inclusive, relating to Special Regulations for the Fifth Avenue Subdistrict are applicable only in the Fifth Avenue Subdistrict, whose boundaries are shown on Map 1 in Appendix A of this Chapter. They supplement or modify the regulations of this Chapter applying generally to the #Special Midtown District#, of which this Subdistrict is a part.

81-82 - Special Regulations on Permitted and Required Uses

LAST AMENDED
2/2/2011

In order to preserve, protect and enhance the character of the Fifth Avenue Subdistrict as the showcase of New York and national retail shopping, and to allow for #uses# that are consistent with the character of the Fifth Avenue Subdistrict as a major shopping and tourist destination, the following special limitations are imposed on the location and kinds of #uses# and #signs# permitted within the Fifth Avenue Subdistrict. These requirements and limitations shall apply to #developments#, #enlargements#, #extensions# or changes of #use#.

(a) Restriction on ground floor #uses#

#Uses# within #stories# located on the ground floor level or on a floor within five feet of #curb level#, except for lobby space, shall be limited to #uses# listed in Use Group F.

(b) Minimum retail space requirement

Any #zoning lot#, or portion thereof, located within the Fifth Avenue Subdistrict shall contain #uses# listed in Use Group F with a #floor area ratio# of not less than 1.0. When existing #uses# listed in Use Group F are retained, their #floor area# may be counted toward such requirement. In order to count toward the requirement, retail or service establishments shall be located on levels up to but not exceeding a height of six #stories# or 85 feet, whichever is less, or not more than five feet below #curb level#.

(c) Use Group F

Use Group F comprises a group of establishments selected to promote and strengthen retail business in the Fifth Avenue Subdistrict.

Antique stores

Art galleries, commercial

Artists' supply stores

*Banks

Beauty parlors

Book or card stores

Candy stores

Clothing or clothing accessory stores, with no limitation on #floor area# per establishment

Department stores

Eating or drinking establishments including those which provide outdoor table service or have music for which there is no cover charge and no specified showtime

Eating or drinking establishments with musical entertainment but not dancing, with a capacity of 200 persons or less

Florist shops

Food stores, including supermarkets, grocery stores, meat markets or delicatessen stores

Furrier shops, custom

Gift shops

Jewelry shops

Leather goods or luggage stores

Millinery shops

Music shops

Newsstands, open or enclosed

Optician or optometrist establishments

Package liquor stores

Photographic equipment or supply stores

Record shops

Shoe stores

Sporting or athletic stores

Stamp or coin stores

Stationery stores

**Studios, television or radio

Tailor or dressmaking shops, custom

Television, radio, phonograph or household appliance stores

Toy stores

*Travel bureaus

Variety stores

Watch or clock stores or repair shops

Any #use# or #uses# marked with an asterisk (*) shall occupy, in the aggregate at the ground floor level, no more than 15 percent of the linear #street# frontage of the #zoning lot# on or within 50 feet of Fifth Avenue and no more than 10 percent of the total #lot area# of the #zoning lot# within 50 feet of Fifth Avenue.

Any #use# or #uses# marked with two asterisks (**) shall be permitted on the ground floor level only if:

(1) the #building# has frontage on Fifth Avenue; and

(2) all portions of the #street wall# of the #building# are set back from the #street line# of Fifth Avenue by a minimum of 40 feet.

(d) Modification of #use# regulations on a #zoning lot# with no frontage on Fifth Avenue

For a #zoning lot# which has no frontage on Fifth Avenue, the mandatory retail #use# regulations of this Section may be modified for that portion of the #zoning lot# located more than 100 feet from the #street line# of Fifth Avenue, provided that the City Planning Commission certifies that the ground floor space is occupied by a #community facility# #use# which maintains front wall transparency up to a height of one #story# above the abutting sidewalk level generating pedestrian interest and activity, and is compatible with the character and objectives of the Fifth Avenue Subdistrict. In no event shall the #street line# frontage occupied by such #use# exceed 30 feet.

(e) The following special #sign# regulations apply to existing as well as new establishments or #uses#:

(1) The aggregate area of all #signs# in ground floor store windows are restricted to not more than one-third of the window area. Below a level of 10 feet above #curb level#, #signs# shall not be permitted on the exterior of any #building#.

(2) The display of banners or pennants from the exteriors of #buildings# is prohibited.

For the purposes of this Section, any #signs#, including banners and pennants, which do not comply with the above regulations may be continued for one year after April 28, 1983, provided that after the expiration of that period, such #non-conforming# #sign# shall terminate. A #sign# which the Chairperson of the City Planning Commission certified as an integral part of the #building# shall not be required to terminate.

81-83 - Special Street Wall Requirements

LAST AMENDED
2/2/2011

The #street wall# of any #building# with frontage on Fifth Avenue shall extend without setback from the Fifth Avenue #street line# for at least 90 percent of the entire length of the #front lot line#. The #street wall# shall reach a minimum required height of 85 feet and shall not exceed a height of 125 feet at or within 10 feet of the #street line#.

Where a #building# occupies less than an entire #block# front of Fifth Avenue frontage, the height of the #street wall# at the #street line# shall be not more than 10 feet above or below the height of an adjacent existing #building# at the #street line#. If the #building# is on an #interior lot# between two adjacent existing #buildings# of different heights, the height of such #building's# #street wall# at the #street line# shall be not more than 10 feet above or below the #street wall# height of one of the adjacent existing #buildings# at the #street line#. However, this shall not be construed to permit a #street wall# height of less than 85 feet or more than 125 feet at the #street line#. At the required height of the #building's# #street wall# at the #street line#, the #street wall# must extend continuously without setback for at least 75 percent of its required width and no portion of its required width shall be set back more than 10 feet from the #street line#.

For the purpose of calculating the maximum #street wall# height on the #narrow street# frontage of a #corner lot# by the weighted average

method, as set forth in paragraph (b) of Section 81-262 (Maximum height of front wall at the street line), the maximum #street wall# height generally applicable along the #narrow street# shall be averaged with a height of 150 feet for the first 100 feet from the #street line# intersection, provided that no actual #street wall# either on the Fifth Avenue or on the #narrow street# frontage shall exceed a height of 125 feet at the #street line#.

Below the minimum required #street wall# height, recesses whose depth shall be measured in all cases from the #street line#, shall be permitted only as follows: no recesses greater than 10 feet deep shall be permitted; recesses up to 10 feet deep shall be limited in their aggregate area to no more than 30 percent of the area of the #street wall# below the minimum required #street wall# height; in addition, recesses up to two feet deep shall be limited in their aggregate area to no more than 20 percent of the area of the #street wall# below the minimum required #street wall# height; and recesses up to one foot deep shall not be limited in their aggregate area. For the area above the minimum required #street wall# height, recesses are not restricted.

Above a height of 125 feet, a #street wall# shall be set back not less than 10 feet from the #street line#.

81-84 - Mandatory Regulations and Prohibitions

LAST AMENDED
2/2/2011

The following requirements listed in this Section shall apply to all #developments#, #enlargements#, #extensions# or changes of #use# within the Subdistrict:

(a) Pedestrian access to #uses#

No access from the Fifth Avenue #street line# or within 50 feet of the Fifth Avenue #street line# shall be permitted to lobbies for office, #residential# or hotel #uses# or to any new #use# not listed in Use Group F, except when the #zoning lot# is inaccessible from any other #street#, in which case the total amount of frontage occupied by lobby space or entrance space for such #uses# shall not exceed 40 feet or 25 percent of the #building's# total #street# frontage, whichever is less.

No #public plaza#, or any part thereof, shall be permitted on or within 50 feet of the Fifth Avenue #street line#.

(b) Off-street parking regulations

No off-street parking facilities are permitted within the Fifth Avenue Subdistrict.

(c) Off-street loading regulations

In no event shall access to #accessory# off-street loading berths be permitted on or within 50 feet of the Fifth Avenue #street line#. Beyond 50 feet from the Fifth Avenue #street line#, where three or more #accessory# loading berths are required, such berths shall be located below #street# grade. Access to such berths, however, shall be permitted at #street# grade.

#Interior lots# with a frontage only on Fifth Avenue or only on a #wide street# shall not contain loading berths.

81-85 - Transfer of Development Rights From Landmark Sites

LAST AMENDED
2/2/2011

For #developments# or #enlargements#, in addition to the provisions of Sections 74-79 (Transfer of Development Rights from Landmark Sites) and 81-212 (Special provisions for transfer of development rights from landmark sites), the City Planning Commission may modify or waive the requirements of Section 81-40 (MANDATORY DISTRICT PLAN ELEMENTS), inclusive, and the requirements of Section 81-84 (Mandatory Regulations and Prohibitions).

In granting such special permit, the Commission shall find that the permitted transfer of #floor area# and modification or waiver of mandatory plan elements will result in a distribution of #bulk# and arrangement of #uses# on the #zoning lot# that relate more

harmoniously with surrounding landmark #buildings or other structures#.

81-90 - SPECIAL REGULATIONS FOR PRESERVATION SUBDISTRICT

LAST AMENDED
2/2/2011

In order to conform with the existing scale and character of the Preservation Subdistrict, any #zoning lot# located in the underlying C5-P District shall be limited to a maximum #floor area ratio# of 8.0.

For all purposes other than as set forth in this Section, the R10 District regulations shall apply to any portion of a #building# containing #residential uses#.

Mandatory #street walls# are required as follows:

> The #street wall# of any #building# shall be located on the #street line# and shall extend along the full length of the #front lot line# to a minimum height of 72 feet above the #curb level#, or the full height of 72 feet above the #curb level#, or the full height of the #building#, whichever is less. Above a height of 85 feet, the #street wall# shall be set back at least 15 feet from the #street line# and shall be subject to the #sky exposure plane# regulations of Section 33-432 (In other Commercial Districts) applicable in C5 Districts. The provisions of Sections 33-44 (Alternate Front Setbacks) and 33-45 (Tower Regulations) are not applicable in the Preservation Subdistrict.
>
> On application, the City Planning Commission may grant special authorization for minor modifications of the mandatory #street wall# provisions of this Section as applied to an #enlargement#, upon the applicant's showing of compelling necessity. Such authorization, however, may in no event include modification of permitted #floor area# regulations.

Appendix A - Midtown District Plan Maps

LAST AMENDED
8/9/2017

(8/9/17)

Map 1: Special Midtown District and Subdistricts (81-A1)

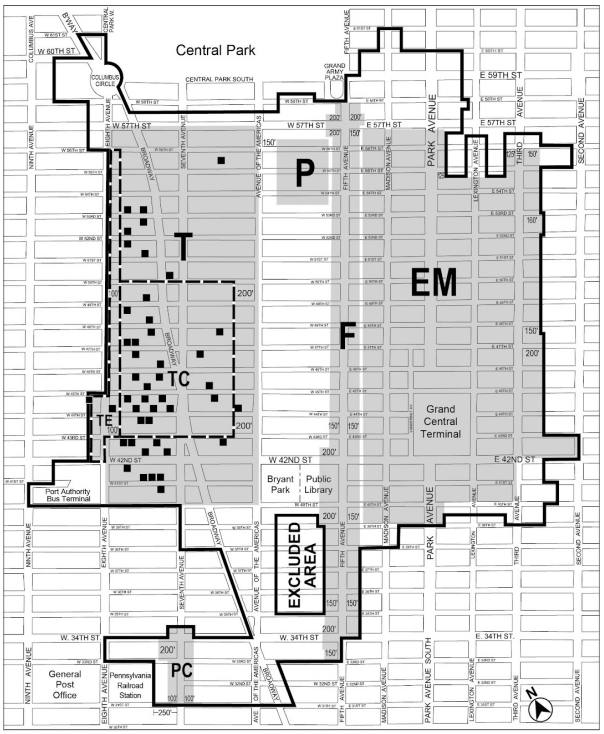

F	Fifth Avenue Subdistrict
EM	East Midtown Subdistrict
PC	Penn Center Subdistrict
P	Preservation Subdistrict
T	Theater Subdistrict
TC	Theater Subdistrict Core
TE	Theater Subdistrict Eighth Avenue Corridor
■	Listed Theaters
——	Special Midtown District

(8/9/17)

Map 2: Special East Midtown Subdistrict and Subareas (81-A2)

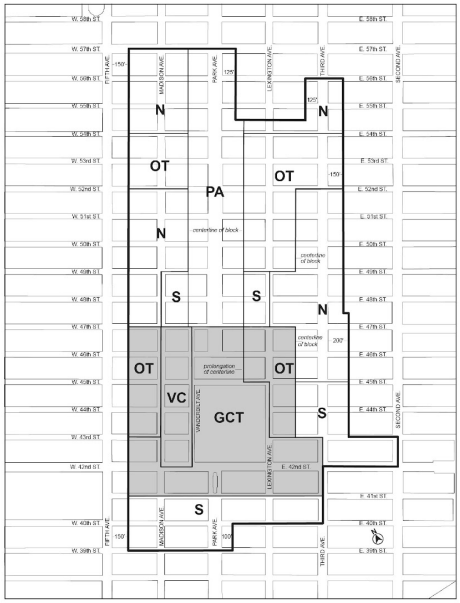

East Midtown Subdistrict
Grand Central Core Area
GCT – Grand Central Transit Improvement Zone Subarea
N – Northern Subarea
OT – Other Transit Improvement Zone Subarea
PA – Park Avenue Subarea
S – Southern Subarea
VC – Vanderbilt Corridor

(8/9/17)

Map 3: Retail and Street Wall Continuity (81-A3)

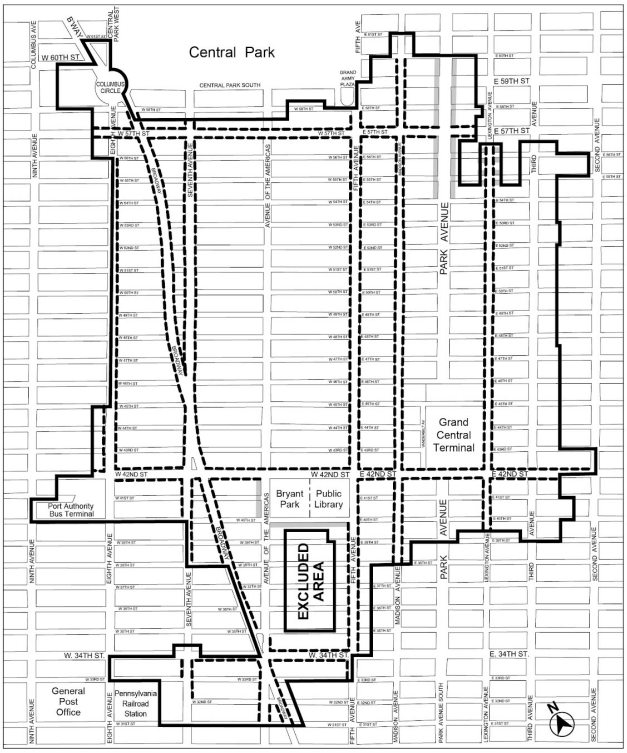

Special Midtown District

Retail and Street Wall Continuity required

Only Street Wall Continuity required

(8/9/17)

Map 4: Subway Station and Rail Mass Transit Facility Improvement Areas (81-A4)

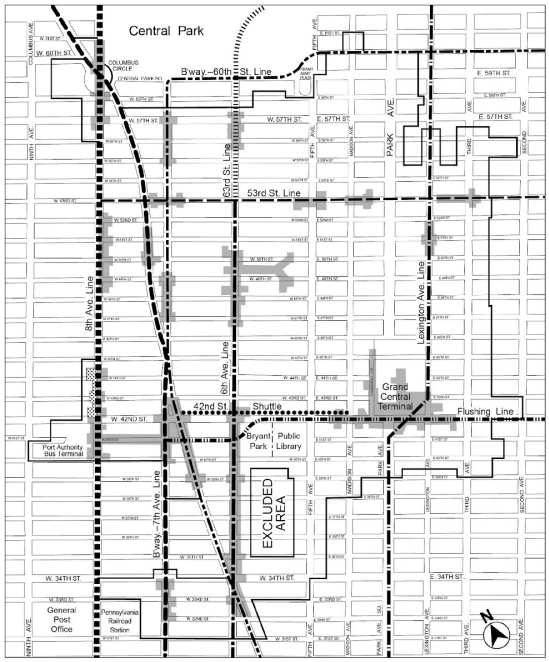

Special Midtown District

Improvement Area

Improvement Area (Subway station improvement bonus pursuant to Section 81-292 not applicable)

8th Ave. Line

Broadway–7th Ave. Line

Broadway–60th St. Line

6th Ave. Line

Lexington Ave. Line

63rd St. Line

53rd St. Line

42nd St. Shuttle

Flushing Line

Appendix B - Daylight Evaluation Charts

LAST AMENDED
8/9/2017

(8/26/92)

Chart 1. Daylight Evaluation Diagram - 60 Foot Street (81-B1L&R)

(A high resolution PDF of this chart is available at http://www1.nyc.gov/site/planning/zoning/graphic-files.page)

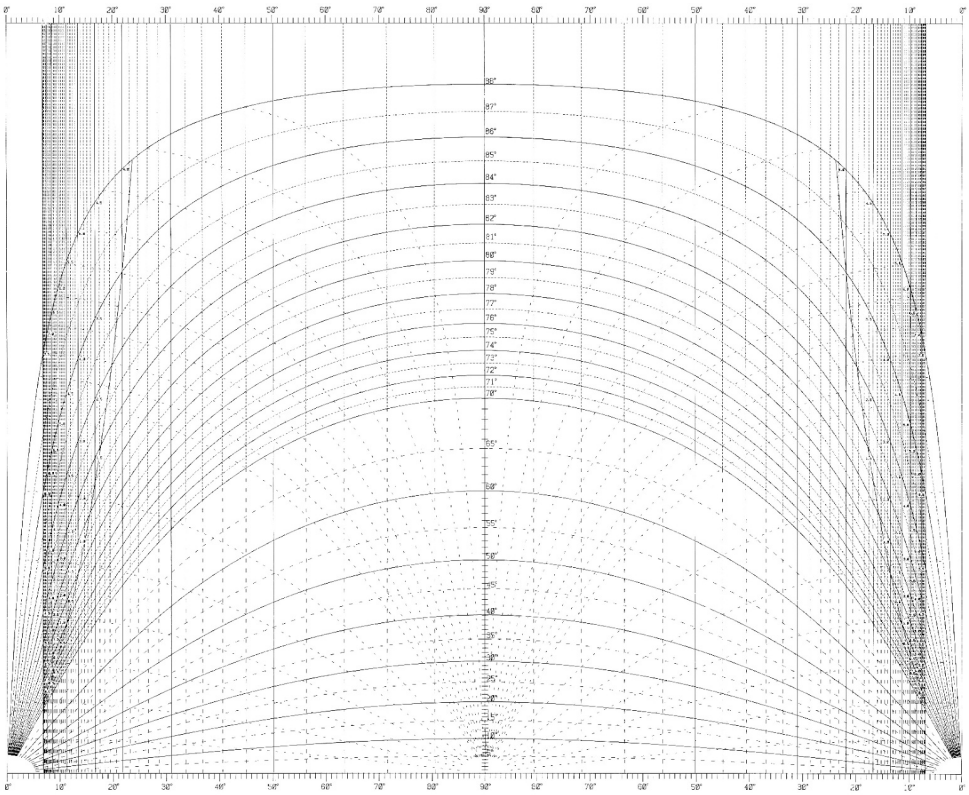

Daylight Evaluation Diagram, 60 Foot Street

(8/26/92)

Chart 2. Daylight Evaluation Diagram - 75 & 80 Foot Streets (81-B2L&R)

(A high resolution PDF of this chart is available at http://www1.nyc.gov/site/planning/zoning/graphic-files.page)

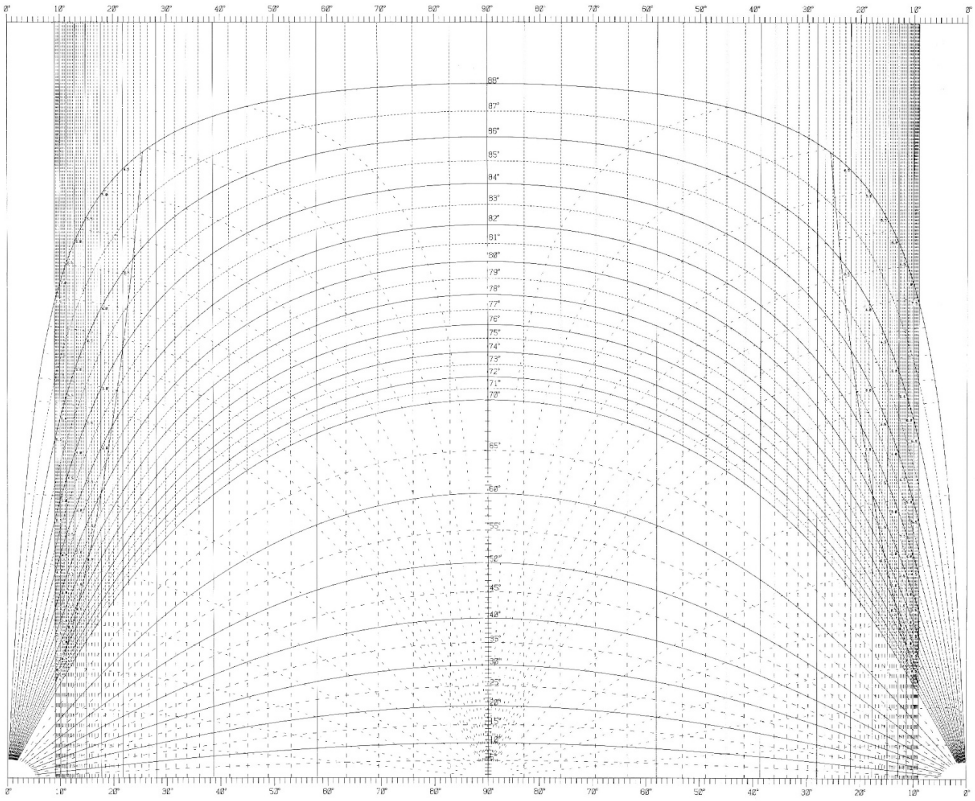

Daylight Evaluation Diagram, 75 and 80 Foot Street

(8/26/92)

Chart 3. Daylight Evaluation Diagram - 100 or more Foot Streets (81-B3L&R)

(A high resolution PDF of this chart is available at http://www1.nyc.gov/site/planning/zoning/graphic-files.page)

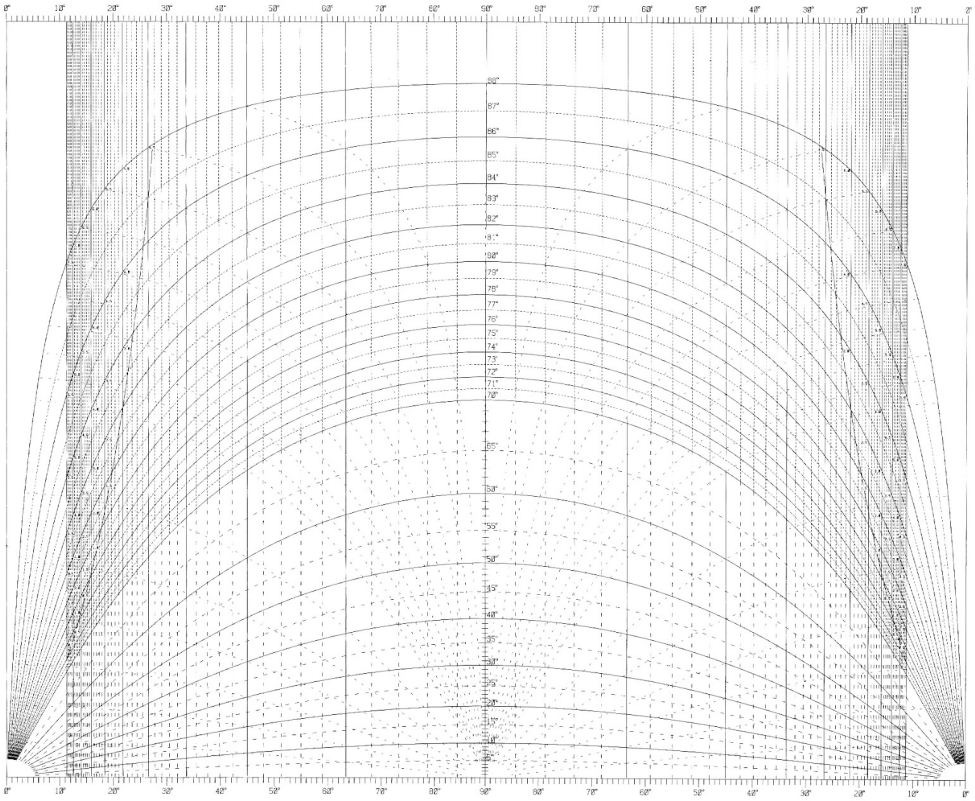

Daylight Evaluation Diagram, 100 or More Foot Street

(8/9/17)

Chart 4. Daylight Evaluation Diagram Park Avenue - 140 Foot Street (81-B4L&R)

(A high resolution PDF of this chart is available at http://www1.nyc.gov/site/planning/zoning/graphic-files.page)

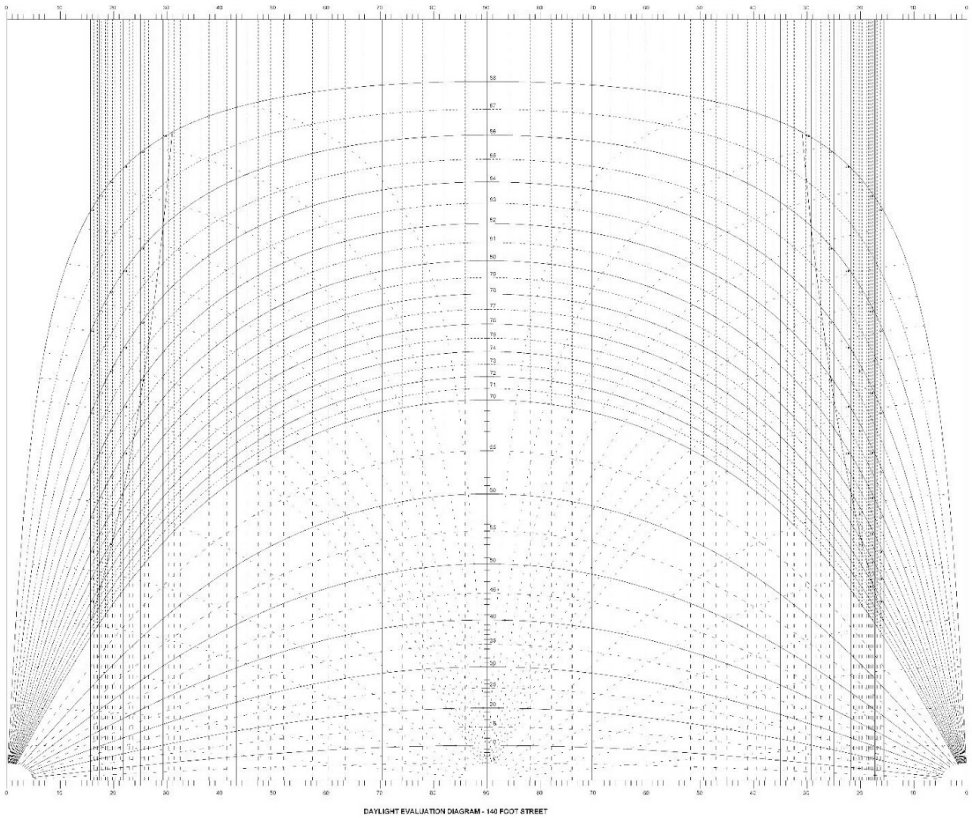

Daylight Evaluation Diagram, Park Avenue