Zoning Resolution

THE CITY OF NEW YORK
Eric Adams, Mayor

CITY PLANNING COMMISSION
Daniel R. Garodnick, Chair

81-26 - Height and Setback Regulations--Daylight Compensation

File generated by https://zr.planning.nyc.gov on 6/25/2023

81-26 - Height and Setback Regulations--Daylight Compensation

LAST AMENDED
5/13/1982

81-261 - Definitions

LAST AMENDED
2/2/2011

Compensating recess

A portion of a #zoning lot# which, at the #building# height selected for determining compliance with the provisions of Section 81-26 (Height and Setback Regulations--Daylight Compensation), lies in the #free zone# (Zone A on the #encroachment grid#), is not covered by any portion of a #building# and qualifies as compensating for #encroachments# beyond the #free zone# under the provisions of Section 81-264 (Encroachments and compensating recesses). (See illustration of #Compensating Recess# and #Encroachment#)

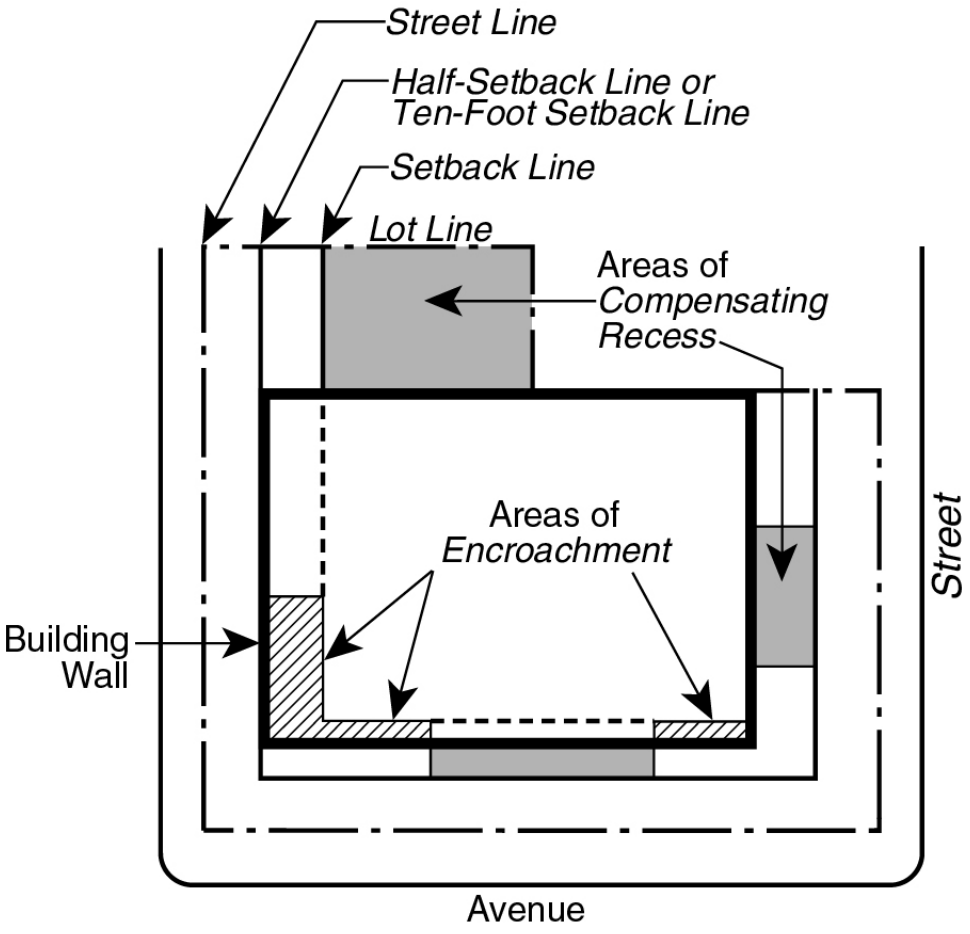

COMPENSATING RECESS AND ENCROACHMENT

(81-261.1)

Encroachment

A projection beyond the #setback line#, the #free zone# or the #half-setback line# by any portion of a #building# that exceeds the maximum height permitted at the #street line#. (See illustration of #Compensating Recess# and #Encroachment#)

Encroachment grid

A plan drawing of the #zoning lot# at any given height above #curb level# selected to determine compliance with the provisions of Section 81-26 and showing, for that height, #street lines#, #setback lines#, #half-setback lines#, #Zone A# (the #free zone#), #Zone B# and #Zone C# (#encroachment zones#) and, where applicable, the #ten-foot setback line#. The #encroachment grid# serves as a device for measuring areas of #encroachment# beyond the #free zone# and areas of #compensating recess# within the #free zone#. (See illustration of #Encroachment Grid#)

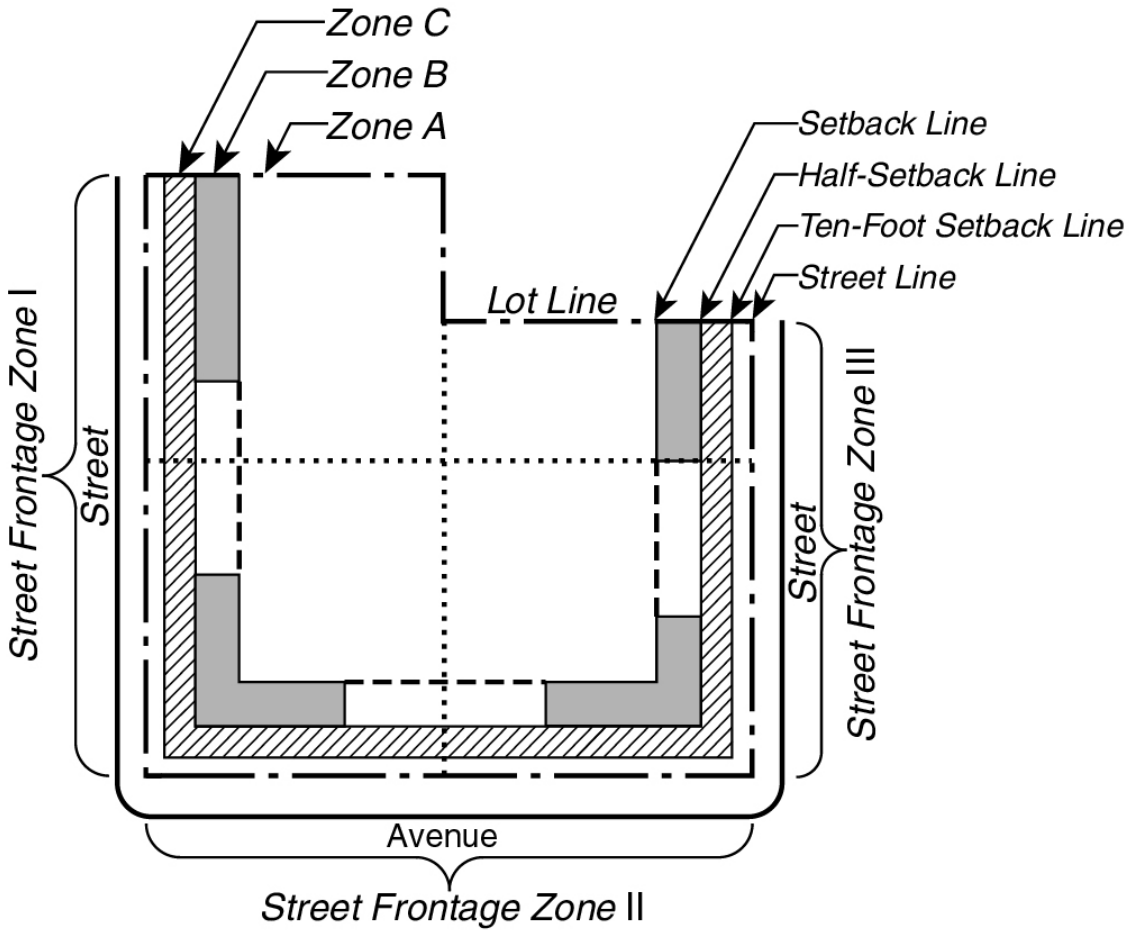

ENCROACHMENT GRID

(81-261.2)

Free zone

That portion of a #zoning lot#, at any given height, which may be covered by a #building# without coverage constituting an #encroachment# that requires daylight compensation.

In addition to the area that lies behind a #setback line# or #setback lines#, the #free zone# shall include areas between the #setback line# and either the #half-setback line# or the #ten-foot setback line#, whichever is further from the #street line#, and

which qualify as #free zone# areas under the #middle one-third rule#. The #free zone# is referred to as #Zone A# on the #encroachment grid#.

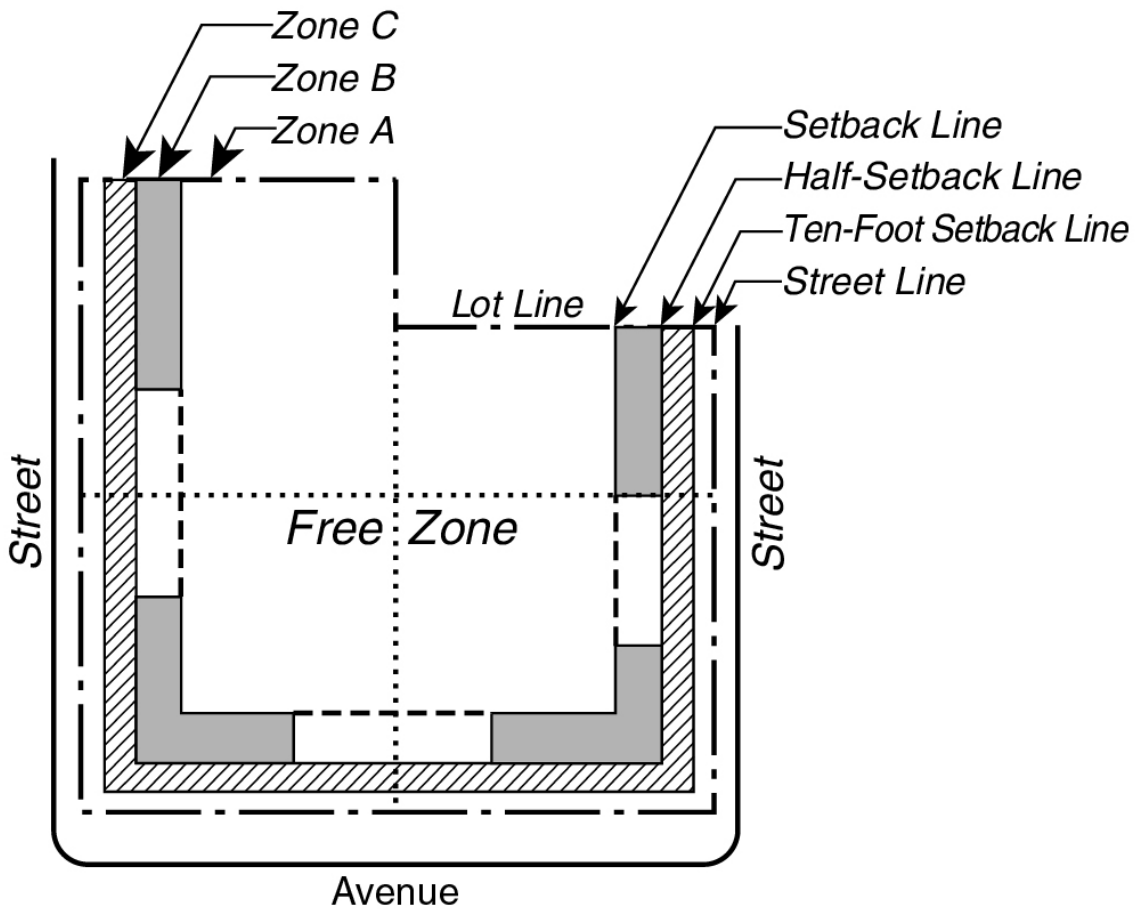

FREE ZONE

(81-261.3)

Half-setback line

A line drawn parallel to a #street line# and halfway between the #street line# and the #setback line#. (See illustration of #Setback Line# and #Half-Setback Line#)

Middle one-third rule

The rule under which, for the middle one-third of the #front lot line# length, the #free zone# includes area between the #setback line# and either the #half-setback line# or the #ten-foot setback line#, whichever is further from the #street line#. However, on a #corner lot# the #free zone# does not extend beyond the #setback line# along an intersecting #street#. (See illustrations of #Middle One-Third Rule#)

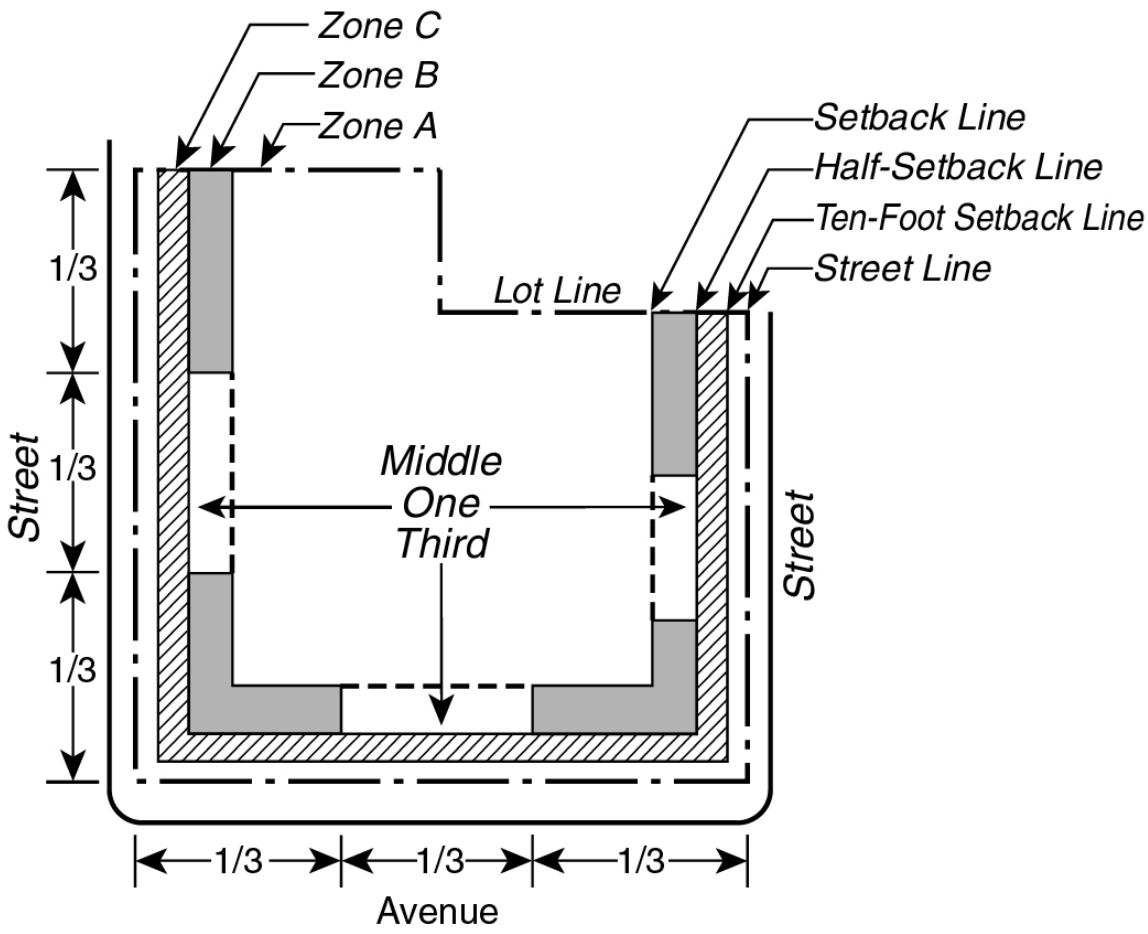
Zone C
Zone B
Zone A
Setback Line
Half-Setback Line
Ten-Foot Setback Line
Street Line
Lot Line
1/3
1/3
1/3
Street
Middle
One
Third
Street
1/3
1/3
1/3
Avenue

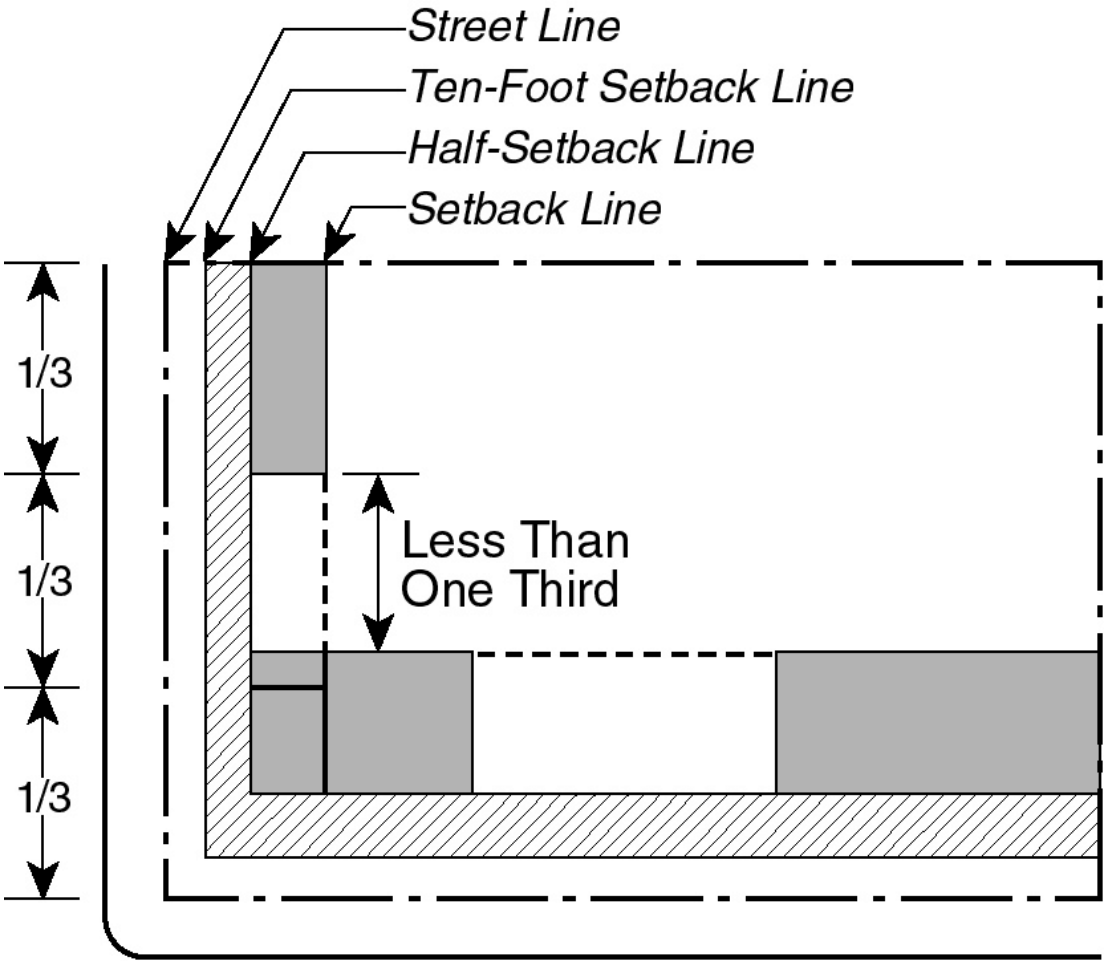
Street Line
Ten-Foot Setback Line
Half-Setback Line
Setback Line
1/3
1/3
1/3
Less Than
One Third

MIDDLE ONE-THIRD RULE

(81-261.4)

Setback line

A line drawn in plan parallel to a #street line# and showing for a given #building# height the minimum depth to which a #building# is required to be set back from the #street line# by the applicable depth to height chart in Section 81-263 (Standard setback requirements). Required setbacks, established by the chart, increase with the #building's# height. (See illustration of #Setback Line# and #Half-Setback Line#)

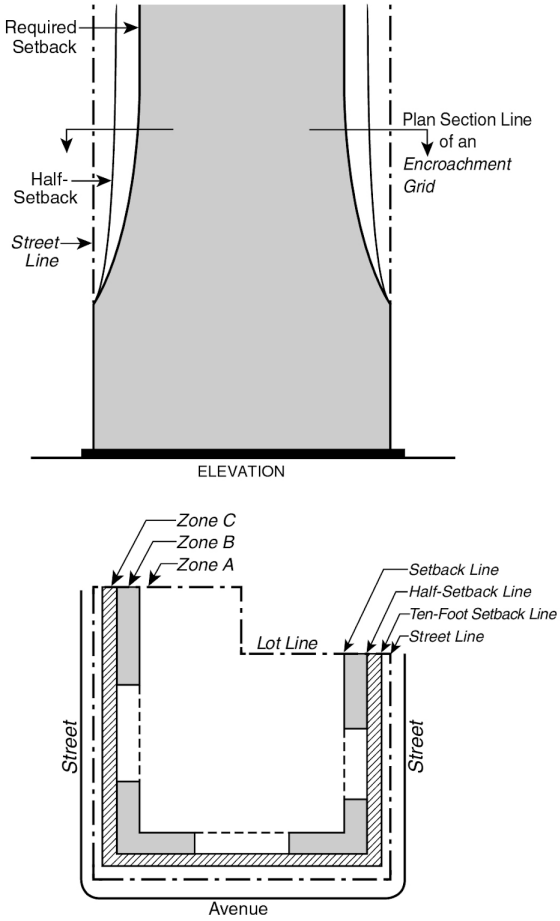

SETBACK LINE AND HALF-SETBACK LINE

(81-261.5)

Street frontage zone

A portion of a #zoning lot# which lies within an area bounded by a continuous #front lot line# and either the center line of the #block# or a line 100 feet distant from and parallel to that #front lot line#, whichever is closer to that #front lot line#. There shall be a #street frontage zone# for each #zoning lot# #street# frontage. (See illustration of #Street Frontage Zones#)

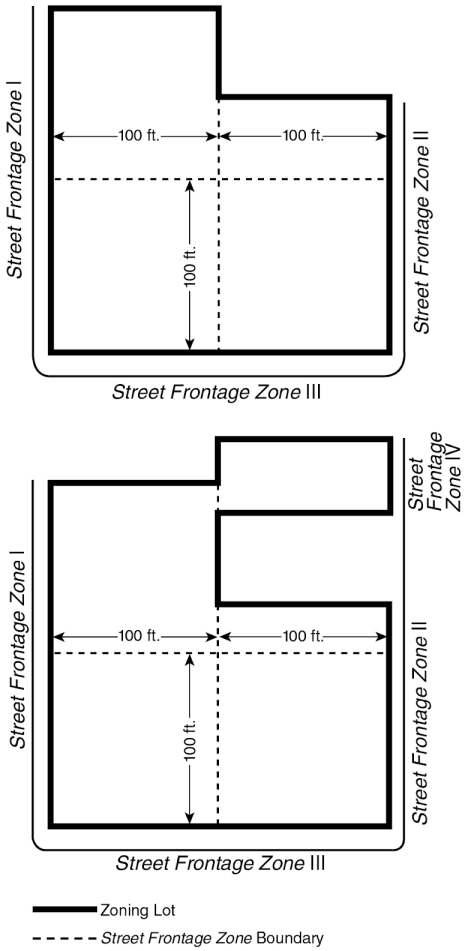

STREET FRONTAGE ZONES

(81-261.6)

Ten-foot setback line

A line which is parallel to the #street line# at a depth of 10 feet and represents the minimum distance any portion of a #building# exceeding the maximum height at the #street line# is required to be set back from the #street line#. A greater setback distance may be required by a #setback line# or a #half-setback line# depending upon the #building# height for which such #setback line# or #half-setback line# is established.

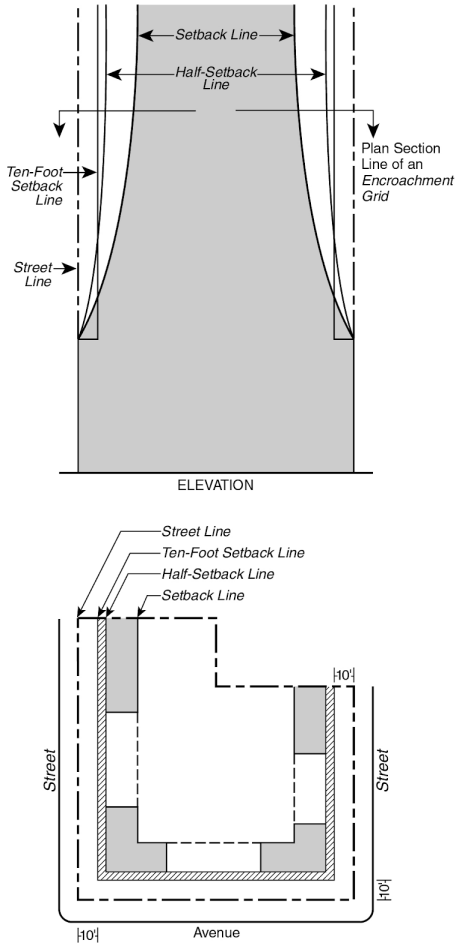

TEN-FOOT SETBACK LINE ON AN ENCROACHMENT GRID

(81-261.7)

Zone A, Zone B, Zone C

"Zone A," "Zone B" and "Zone C" are zones on an #encroachment grid# defined as follows:

(a) #Zone A# is the #free zone#.

(b) #Zone B#, an #encroachment# zone, is the zone, exclusive of any area in #Zone A# and any area closer to the #street line# than the #ten-foot setback line#, which lies between the #setback line# and either the #half-setback line# or the #ten-foot setback line#, whichever is further from the #street line#.

(c) #Zone C#, an #encroachment# zone and penalty zone, is the zone, exclusive of any area closer to the #street line# than the #ten-foot setback line#, which lies between the #half-setback line# and the #ten-foot setback line#.

81-262 - Maximum height of front wall at the street line

LAST AMENDED
5/13/1982

(a) General provisions

The front wall of a #building# at the #street line# shall not exceed the height limit applying along the #street# on which it fronts. Maximum front wall heights at the #street line# vary with the width of the #street# on which the wall fronts, as follows:

#Street# Width (in feet)	Maximum Front Wall Height at #Street Line# (in feet)
60 or less	90
75 or 80	120
100 or more	150

(b) Special provisions for #corner lots#

For a #corner lot# with frontage on #streets# of different widths, the maximum front wall height at the #street line# of the narrower #street# may be increased above that indicated in paragraph (a) in accordance with either one of the following rules:

Rule 1:

The maximum front wall height at the #street line# for the wider #street# may extend up to 100 feet from the corner along the #street line# of the narrower #street#; or

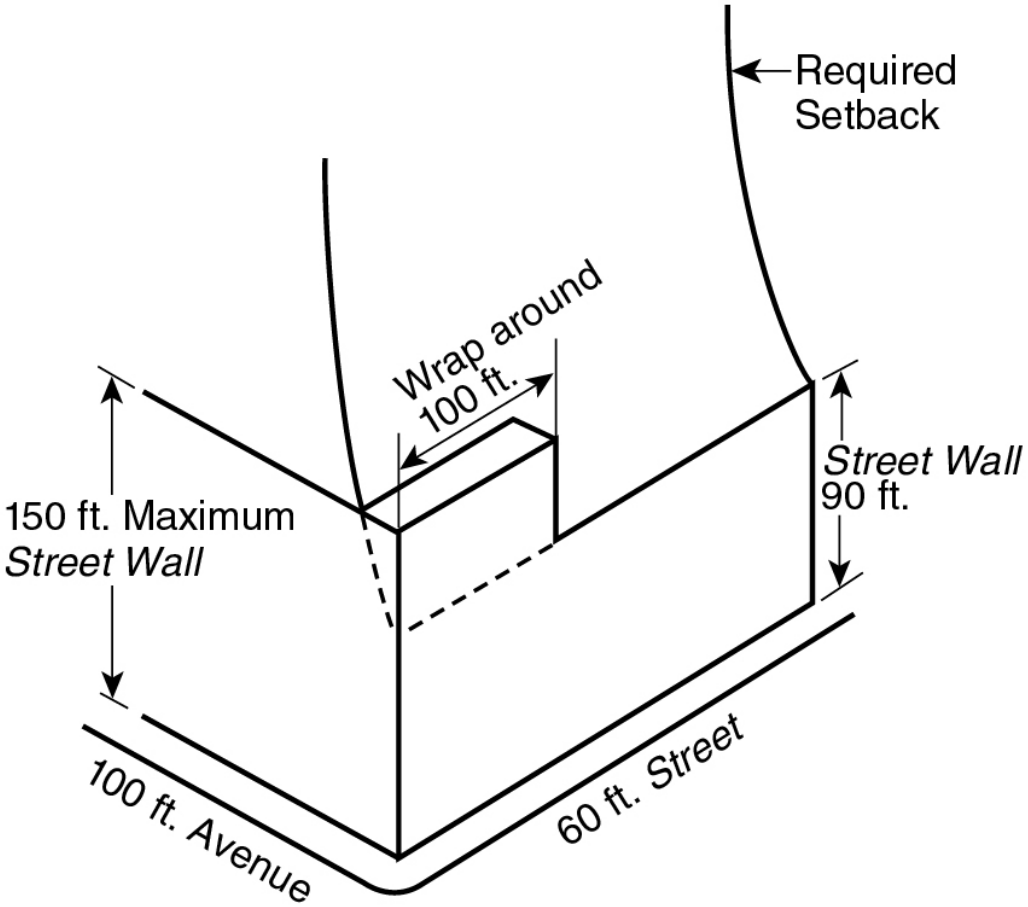

SPECIAL RULE 1 FOR CORNER LOTS

(81-262b.1)

Rule 2:

For any length of frontage from the corner along the narrower #street#, a maximum height for such length of frontage may apply, which shall be the weighted average of (1) the height permitted under Rule 1 for the first 100 feet from the corner, and (2) the standard height limit for front walls on the narrower #street# for the remainder of the frontage. (See illustration of Special Rules for #Corner Lots#)

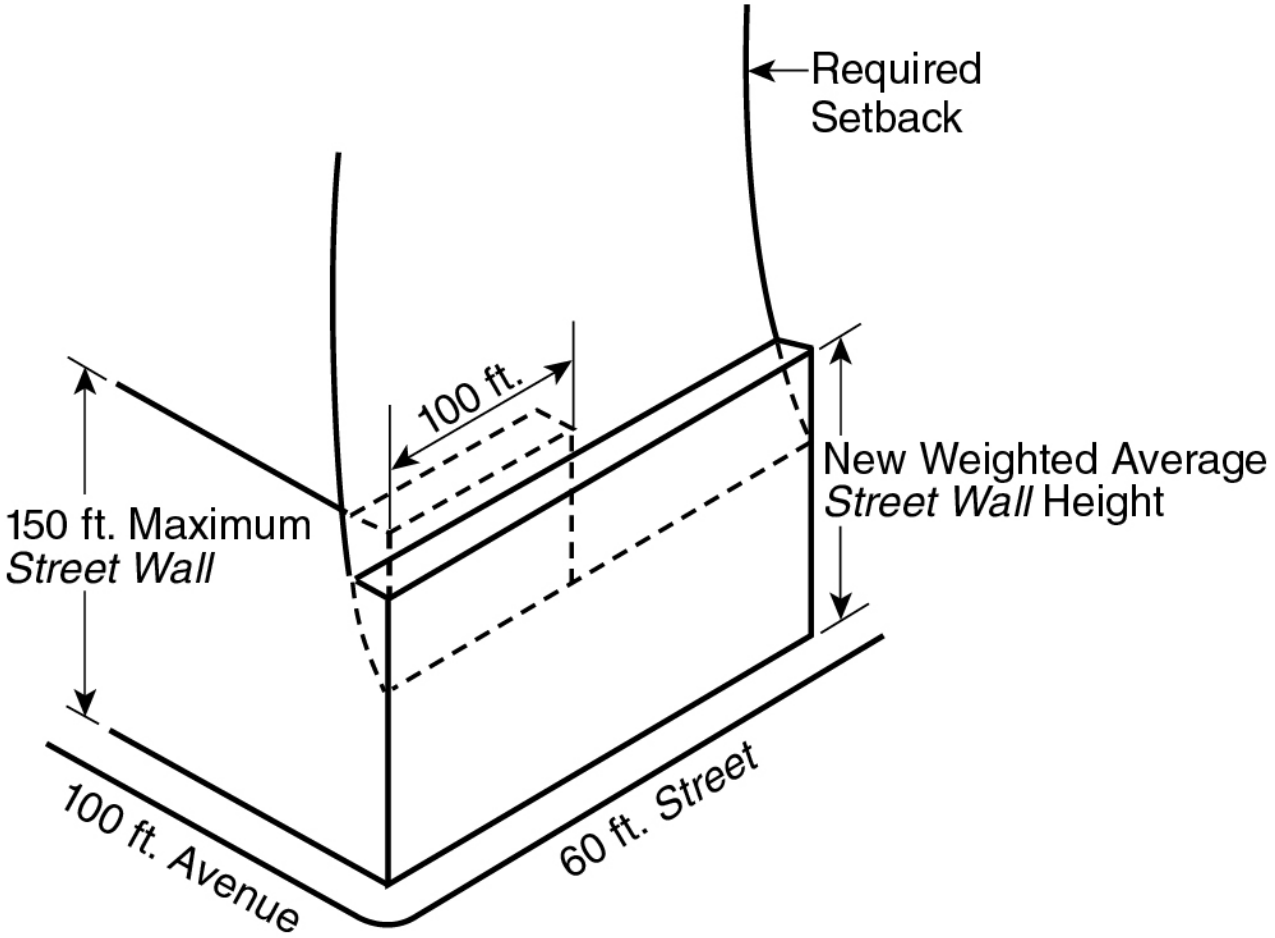

SPECIAL RULE 2 FOR CORNER LOTS

(81-262b.2)

81-263 - Standard setback requirements

LAST AMENDED
2/2/2011

#Buildings# shall comply with the regulations of this Section.

(a) Ten-foot setback requirement

Above the maximum height permitted at the #street line# pursuant to the provisions of Section 81-262, every portion of a #building# shall be set back at least 10 feet from the #street line#.

(b) General setback provisions; depth to height charts

Above the maximum height permitted at the #street line#, #buildings#, in addition to meeting the requirements of paragraph (a) of this Section, are required to be set back behind the applicable #setback line#, the depth of the #setback line# at any point depending upon the height of the wall at that point in accordance with the requirements of applicable Tables A, B or C of this Section presenting required setbacks from #streets# 60 feet or less, 75 or 80 feet, or 100 or more feet in width, respectively.

Table A

SETBACK REQUIREMENTS

ON #STREETS# 60 FEET OR LESS IN WIDTH

Depth of #Setback Line# from #Street Line# at

Stated Heights above #Curb Level#.

Height	Depth of #Setback Line#
90	0.00
100	2.00
110	4.00
120	6.00
130	8.00
140	10.00
150	12.00
160	13.75
170	15.25
180	16.75
190	18.50
200	20.00
210	21.25
220	22.50
230	24.00

240	25.25
250	26.50
260	27.50
270	28.75
280	30.00
290	30.75
300	31.75
310	32.75
320	33.75
330	34.75
340	35.50
350	36.25
360	37.25
370	38.00
380	38.75
390	39.50
400	40.25
410	41.00
420	41.75

430	42.25
440	43.00
450	43.50
460	44.25
470	44.75
480	45.50
490	46.00
500	46.50
510	47.00
520	47.50
530	48.00
540	48.50
550	49.00
560	49.50
570	50.00
580	50.50
590	51.00
600	51.50
610	52.00

620	52.25
630	52.75
640	53.00
650	53.50
660	53.75
670	54.25
680	54.50
690	55.00
700	55.25
710	55.75
Above 710	For every 10 feet the depth shall increase by one foot

Table B

SETBACK REQUIREMENTS

ON #STREETS# 75 OR 80 FEET WIDE

Depth of #Setback Line# from #Street Line# at

Stated Heights above #Curb Level#.

Height	Depth of #Setback Line#
120	0.00
130	1.50
140	3.50

150	5.50
160	7.50
170	9.25
180	11.00
190	12.75
200	14.25
210	15.75
220	17.25
230	18.75
240	20.00
250	21.25
260	22.50
270	23.75
280	24.75
290	26.00
300	27.00
310	28.00
320	29.00
330	30.00

340	31.00
350	32.00
360	32.75
370	33.75
380	34.50
390	35.50
400	36.25
410	37.00
420	37.75
430	38.25
440	39.00
450	39.75
460	40.50
470	41.00
480	41.75
490	42.50
500	43.00
510	43.50
520	44.00

530	44.75
540	45.25
550	45.75
560	46.25
570	46.75
580	47.25
590	47.75
600	48.25
610	48.75
620	49.00
630	49.50
640	50.00
650	50.50
660	50.75
670	51.25
680	51.75
690	52.00
700	52.50
710	53.00

Above 710	For every 10 feet the depth shall increase by one foot

Table C

SETBACK REQUIREMENTS

ON #STREETS# AT LEAST 100 FEET WIDE

Depth of #Setback Line# from #Street Line# at

Stated Heights above #Curb Level#.

Height	Depth of #Setback Line#
150	0.00
160	1.50
170	3.00
180	5.00
190	6.75
200	8.50
210	10.25
220	11.75
230	13.25
240	14.75
250	16.00
260	17.25
270	18.75

280	20.00
290	21.00
300	22.25
310	23.50
320	24.50
330	25.50
340	26.50
350	27.50
360	28.50
370	29.50
380	30.25
390	31.25
400	32.00
410	33.00
420	33.75
430	34.50
440	35.25
450	36.00
460	36.75

470	37.25
480	38.00
490	38.75
500	39.25
510	40.00
520	40.50
530	41.25
540	41.75
550	42.25
560	42.75
570	43.50
580	44.00
590	44.50
600	45.00
610	45.50
620	46.00
630	46.50
640	47.00
650	47.50

660	47.75
670	48.25
680	48.75
690	49.25
700	49.50
710	50.00
Above 710	For every 10 feet the depth shall increase by one foot

(c) Use of tables

To comply with the setback requirements of this Section, a #building# at any height shall be set back at least to the depth of the #setback line# indicated on the applicable table.

For heights between those shown on the table, the depth of the #setback line# shall be interpolated.

Required depths of #setback lines# shall be rounded off to the next highest half foot.

The setback requirements apply only to portions of #buildings# above the maximum height permitted at the #street line#, so that required setbacks on the narrower #street# frontage of a #corner lot# shall apply only to heights above the maximum front wall heights permitted by the #corner lot# provisions of paragraph (b) of Section 81-262 (Maximum height of front wall at the street line).

(d) #Middle one-third rule#

A #building# may penetrate beyond the #setback line# at any height if the penetration is confined to the middle third of the #front lot line# length and complies in all respects with the #middle one-third rule# as defined in Section 81-261 (Definitions).

81-264 - Encroachments and compensating recesses

LAST AMENDED
2/2/2011

In addition to complying with the setback requirements of Section 81-263 (Standard setback requirements), a #building# shall not at any height encroach beyond a #half-setback line# or a #ten-foot setback line#, except as provided below. For each #street frontage zone# and for all #street frontage zones#, taken together on a single #encroachment grid#, a #building# shall not, at any level, have an aggregate area of #encroachment# beyond the #setback line#, other than in any #free zones#, greater than the aggregate area of #compensating recess# at such level.

Except as provided below, an area of #compensating recess# in one #street frontage zone# shall not be used to compensate for #encroachment# in another #street frontage zone#. However, a #building# with a #street frontage zone# which lies along a north-south #wide street# and does not meet the above requirements because of excessive #encroachment# will be in compliance with the #street frontage zone# requirements of this Section if compensation is provided for such excessive #encroachment# by an overlapping #street frontage zone#.

The requirement that the aggregate area of #compensating recess# at least equal the aggregate area of #encroachment#, as set forth in this Section, shall also apply to any #building# which encroaches beyond a #half-setback line# and which is therefore subject to the provisions of Section 81-265 (Encroachment limitations by length and height rules). (See illustration of Encroachments and Compensating Recesses)

(a) Rules for measuring #encroachments# and recesses

Areas of #encroachment# and #compensating recess# shall be measured in plan on one or more #encroachment grids# showing for the #zoning lot#, at a given height level, the #street lines#, the #setback lines#, the #half-setback lines#, the #ten-foot setback lines#, #Zone A#, #Zone B# and #Zone C# and the #street frontage zones#.

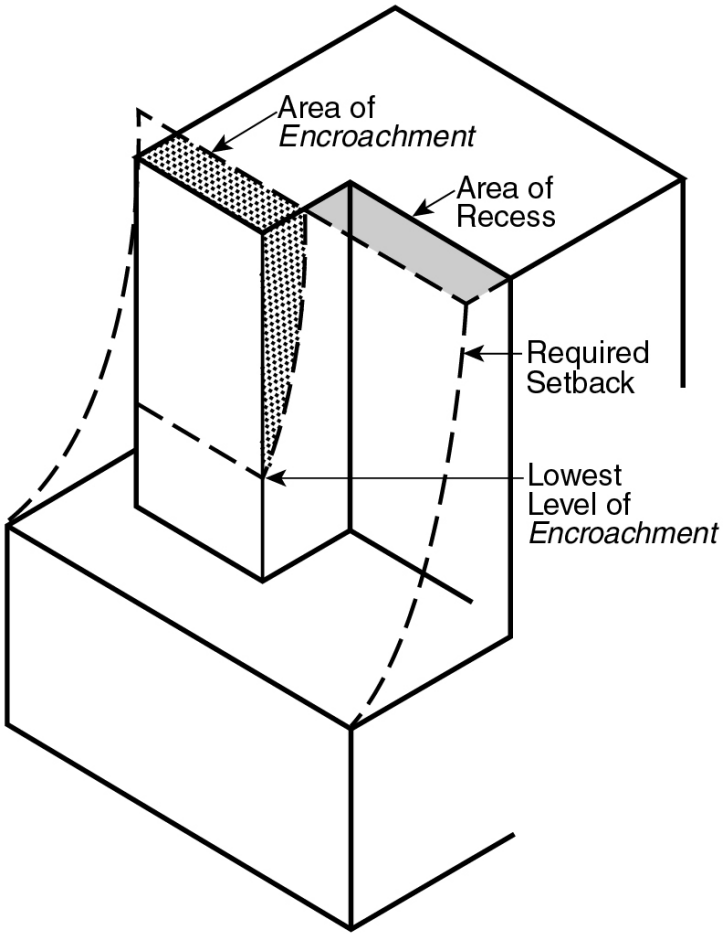

ENCROACHMENTS AND COMPENSATING RECESSES

(81-264a)

The scale of the #encroachment grid# shall be not more than 20 feet to the inch. All #buildings#, existing and proposed, shall be located accurately on the grid in plan at the height level selected to demonstrate compliance. For each #street frontage zone#, the areas of the #building's# #encroachment# in #Zone B# and #Zone C# and the #compensating recess# areas not covered by any #building# in #Zone A# shall be measured on the #encroachment grid#.

(b) Limits of #encroachment#

Except as provided in paragraph (d) of this Section for existing #buildings# below specified heights, #encroachment# is limited as follows:

(1) For each #street frontage zone#, at every height above the maximum front wall height at the #street line#, the area within #Zone A# that is not covered by a #building# and qualifies as #compensating recess# area shall, in the aggregate, equal or exceed the aggregate area in #Zone B# and #Zone C# that is encroached upon by a #building# at such height.

(2) No part of a #building# shall encroach into #Zone C# unless it complies with the provisions of Section 81-265.

(3) On #corner lots#, the projection of a #building# beyond the #setback line# or #half-setback line# on the narrower #street# shall not count as an #encroachment# except at heights above the maximum height permitted at the #street line# by the #corner lot# provisions in paragraph (b) of Section 81-262 (Maximum height of front wall at the street line).

(c) Limitations on #compensating recess#

#Compensating recess# areas are subject to the following limitations:

(1) Any required #compensating recess# area shall extend without diminution of dimensions downward at least to the lowest level at which any #encroachment# into #Zone B# or #Zone C# occurs and upward to the sky. (See illustration of Extension Downward of Compensating Recess Area)

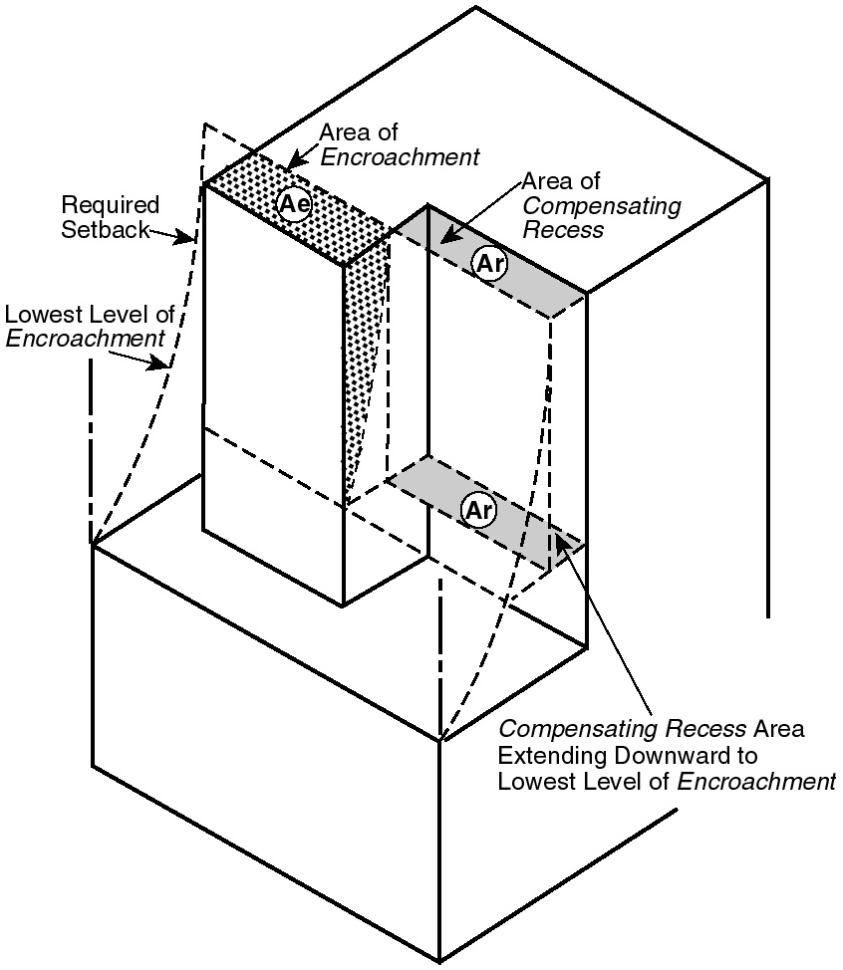

EXTENSION DOWNWARD OF COMPENSATING RECESS AREA

(81-264c1)

(2) #Compensating recess# area shall be visible when viewed from at least one adjacent #street# along a line that intersects the #front lot line# of the #zoning lot# at right angles. (See illustration of Visibility of Compensating Recess Area)

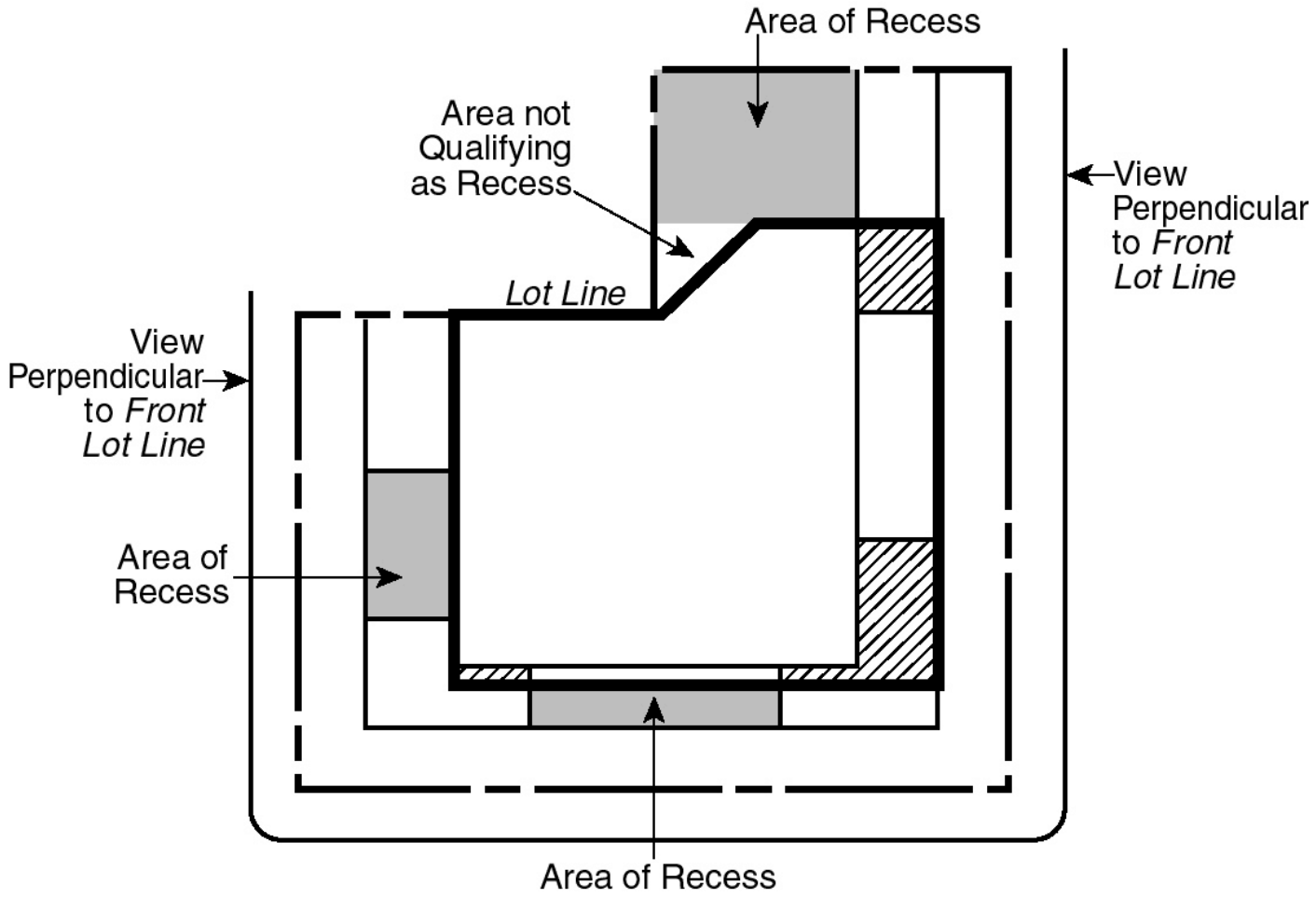

VISIBILITY OF COMPENSATING RECESS AREA

(81-264c2)

(3) The minimum length of a #compensating recess#, measured parallel to the #street line#, and behind the #setback line#, is 30 feet, except for any uncovered portion of an area that qualifies as #Zone A# under the #middle one-third rule# or an uncovered area located behind two intersecting #setback lines#. An uncovered area between the #setback line# and #half-setback line# that qualifies as #Zone A# under the #middle one-third rule# is not subject to the minimum length requirement. (See illustration of Minimum Length of Compensating Recess)

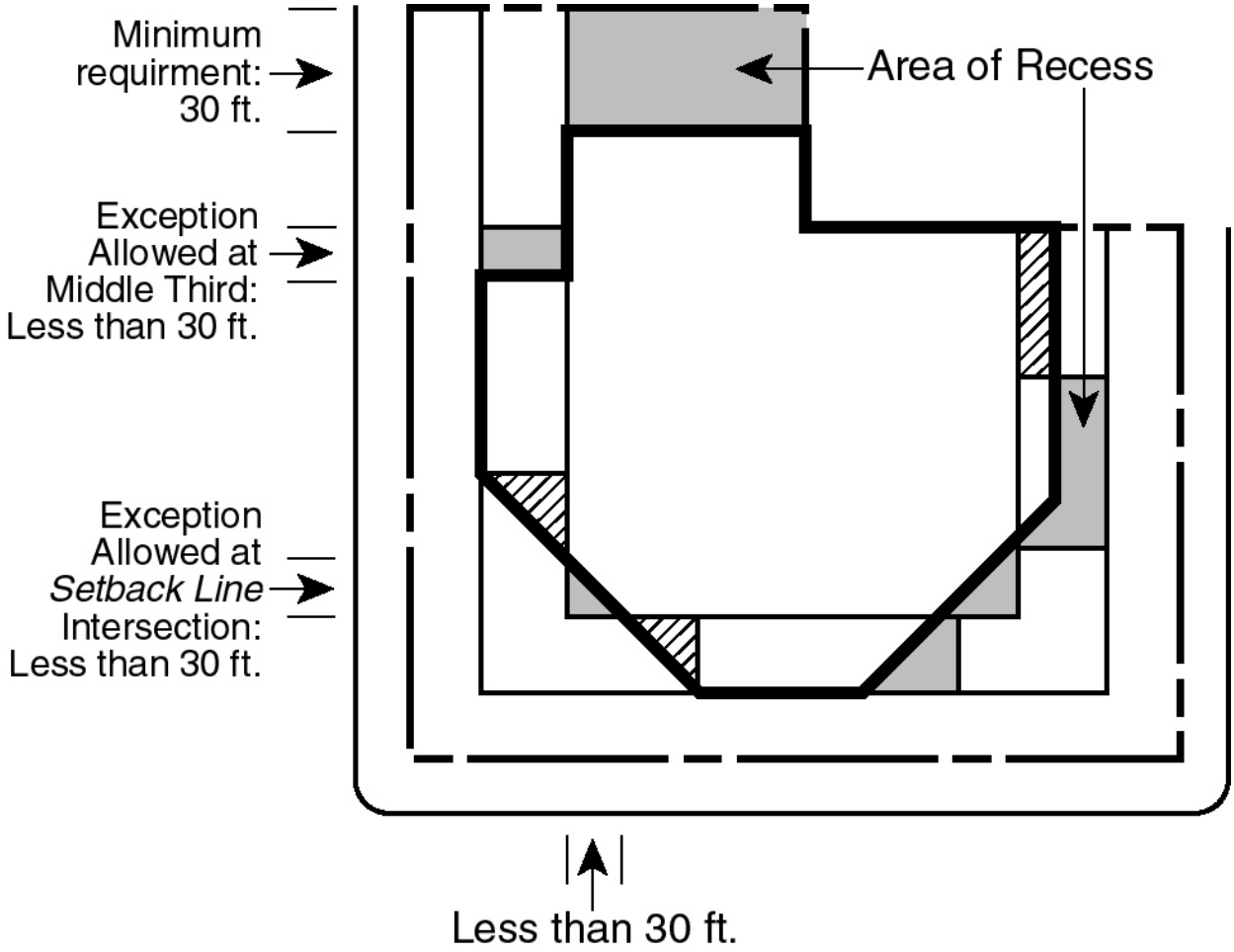

MINIMUM LENGTH OF COMPENSATING RECESS

(81-264c3)

(4) #Compensating recess# area shall be within 100 feet of a #front lot line#.

(d) Existing #buildings# on the #zoning lot#

Where a #zoning lot# contains an existing #building# which exceeds a height limit, an #enlargement# or #development# on such #zoning lot# shall comply with the following provisions:

(1) For each #street frontage zone#, if the existing #building# is not more than 120 feet in height at any point and encroaches into #Zone B# or #Zone C# or beyond the #ten-foot setback line# along the frontage of a #street# 60 feet wide, or if the existing #building# is not more than 150 feet in height at any point and encroaches into #Zone B# or #Zone C# or beyond the #ten-foot setback line# along the frontage of a #street# 75 or more feet in width, the new #building# or #enlargement# is not required to compensate for such #encroachment# by the provision of #compensating recess# areas. #Encroachment# by such an existing #building# into #Zone C# or beyond the #ten-foot setback line# will not subject the new #building# or #enlargement# to the provisions of Section 81-265 unless the new #building# or #enlargement# also encroaches into #Zone C#.

(2) For each #street frontage zone#, space above such existing #building# and within #Zone A# on the #encroachment grid# may count as #compensating recess# area for the new #building# or #enlargement# provided that such space is at or below the lowest level of any compensable #encroachment# by the new #building# or #enlargement#, that it is located within the same #street frontage zone# as that compensable #encroachment#, and that it qualifies in all respects under the provisions of paragraph (c) of this Section

(Limitations on #compensating recess#).

(3) For each #street frontage zone#, if an existing #building# more than 120 feet in height at any point encroaches into #Zone B# or #Zone C# or beyond the #ten-foot setback line# along the frontage of a #street# 60 feet wide, or if an existing #building# more than 150 feet in height at any point encroaches into #Zone B# or #Zone C# or beyond the #ten-foot setback line# along the frontage of a #street# 75 or more feet in width, the #encroachment# of such #building# into #Zone B# or #Zone C# or beyond the #ten-foot setback line# at any height shall be subject to the requirements for #compensating recess# areas set forth in paragraph (b)(1) of this Section, as if it were a new #building#. Where such an existing #building# encroaches into #Zone C# or beyond the #ten-foot setback line#, the provisions of paragraph (f)(2) in Section 81-265 shall apply in addition to the provisions of this Section. (See illustration of Existing Buildings on the Zoning Lot)

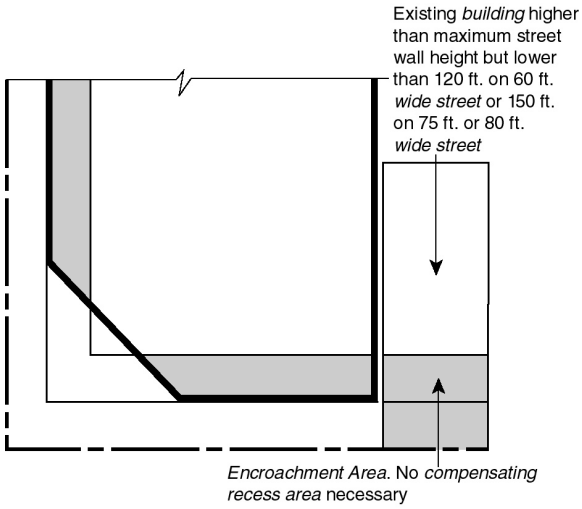

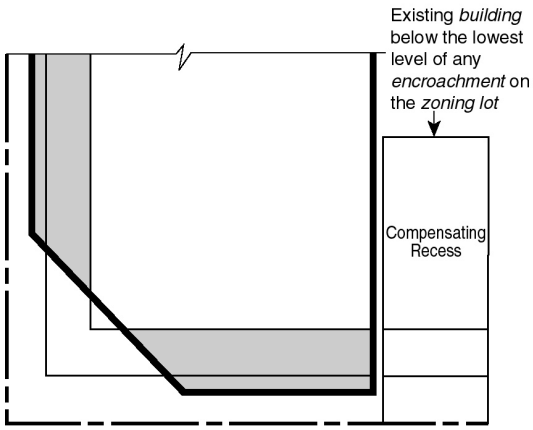

EXISTING BUILDINGS ON THE ZONING LOT

(81-264d3)

81-265 - Encroachment limitations by length and height rules

LAST AMENDED
4/28/1988

Above the maximum height of a front wall at the #street line# as set forth in Section 81-262, a #building# may only encroach beyond the #half-setback line# if it complies with the provisions of this Section and if the area of #compensating recess# equals or exceeds the area of #encroachment# in #Zone B# and #Zone C# in accordance with the provisions of Section 81-264 (Encroachments and compensating recesses).

(a) Special limitations

No #encroachment# beyond the #half-setback line# shall be within 30 feet of a #side lot line#. (See illustration of Prohibited and Allowed Encroachment Beyond Half-Setback Line)

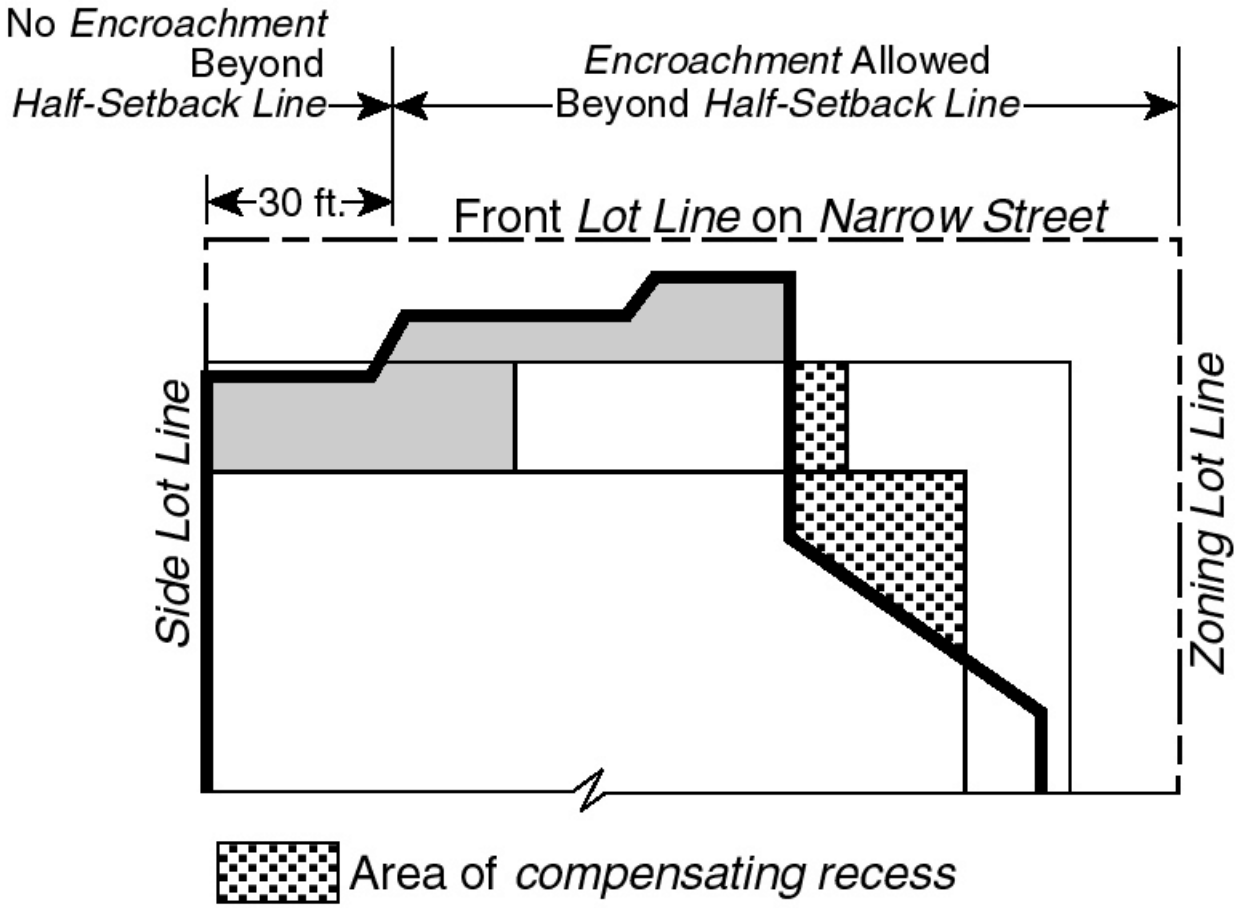

PROHIBITED AND ALLOWED ENCROACHMENT BEYOND

HALF-SETBACK LINE

(81-265a)

(b) General provisions

The length, depth, height and area of #encroachments# along any #street# frontage all contribute to a #building's# impact on daylight access. In order to determine whether the depth of a #building's# #encroachment# into #Zone C# is justified, the length of the #encroachment#, measured parallel to the #street line#, and its height above #curb level# must also be evaluated. The extent of #encroachment# also must be considered in relation to the extent of the area of #compensating recess# in the same #street frontage zone#. The purpose of the length and height rule is to ensure, in the case of #encroachments# beyond the #half-setback line#, that the closer a #building# comes to the #street line#, the less will be the length of its #encroachment#, its height or both. (See illustration of Elements Analyzed)

The elements comprising this analysis are represented by symbols and are as follows:

(1)

De	=	depth of #encroachment#
D		depth of #setback line#

De (depth of #encroachment#) means depth of #encroachment# beyond the #setback line#. Depth of #encroachment# is measured perpendicularly to the #setback line#.

D (depth of #setback line#) means depth of #setback line# from the #street line# or depth of #ten-foot setback line# from the #street line#, whichever depth is greater.

(2)

Le	=	length of #encroachment#
L		length of #front lot line#

Le (length of #encroachment#) means total length of #encroachment# outside the #half-setback line#. Length of #encroachment# is measured as the total length of the #encroachments'# projections on the #street line#.

L (length of #front lot line#) means the length of the #front lot line# along the particular #street#. However, the length of the #front lot line# for the purposes of this Section shall not exceed 300 feet, irrespective of the actual #lot line# length.

(3)

Le	=	length of #encroachment#
Lr		length of recess

Le (length of #encroachment#) as defined in paragraph (b)(2) of this Section.

Lr (length of recess) means total length of #setback line# not encroached upon by a #building#.

(4)

H	=	height of #encroachment#
L		length of #front lot line#

H (height of #encroachment#) means the height of the #encroachment# above #curb level#.

L (length of #front lot line#) as defined in paragraph (2) of this Section.

(5)

Ar	=	area of #compensating recess#
Ae		area of #encroachment#

Ar (area of #compensating recess#) means area of #compensating recess# in the particular #street frontage zone#. Area of #compensating recess# is calculated to a depth of 100 feet from the #street line#.

Ae (area of #encroachment#) means area of #encroachment# beyond the #setback line#. Area of #encroachment# is calculated to a depth of 100 feet from the #street line#.

Values for the elements in paragraphs (b)(1) through (b)(5) shall be found for each #street frontage zone# on which there is any #encroachment# beyond the #half-setback line#.

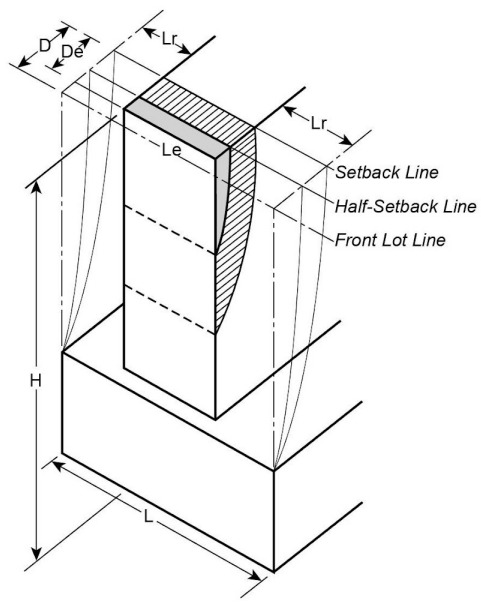

L – Length of *front lot line* along the particular *street*

Le – Length of *encroachment* outside *half-setback line* or *ten-foot setback line*

Lr – Total length of *setback line* not encroached by *building*

De – Depth of *encroachment*

D – Depth of *setback line*

H – Height of *encroachment* above *curb level*

ELEMENTS ANALYZED

(81-265b)

The elements, weighted according to the effects on daylight access, are represented in the formulas and charts that control the depth, length and height of #encroachments#, as set forth in paragraph (c) of this Section.

#Encroachments# of proposed #buildings# or #enlargements# beyond the #half-setback line# are permitted only if in compliance at every point with the formulas in paragraph (c) of this Section. Aside from this general requirement, specified points at which the length, depth, height and area rules shall be applied are presented in paragraphs (d) and (e) of this Section.

(c) #Encroachment# limitations by Formulas 1 and 2

Where applicants elect to have their #buildings# regulated by the formulas, #buildings# shall comply with both Formula 1 and Formula 2 as set forth in this paragraph. Elements of the formulas and the symbols by which they are represented are as set forth in paragraph (b) of this Section.

Formula 1:

	Maximum	H	=	5.5—4	(	De	)	—2.5	(	Le	)
		L				D				L	

Formula 2:

Minimum		Lr	=	L
				3.5

The maximum height of #encroachment# (H) allowed by Formula 1 may be modified for certain conditions, as follows:

(1) For short frontages

For any frontage less than 200 feet in length, the maximum

$$\frac{H}{L}$$

found by applying Formula 1 may be increased by the following multiplier:

$$2 - \frac{L}{200}$$

(2) For large areas of #compensating recess#

To the extent that the aggregate area of #compensating recess# (Ar) exceeds the aggregate area of #encroachment# (Ae), the maximum

$$\left(\frac{H}{L}\right)$$

found by applying Formula 1 may be increased by the following multiplier:

$$1 + \frac{.067\ Ar}{Ae}$$

For the purposes of this modification, the measurement of the area of #compensating recess# (Ar) and the area of #encroachment# (Ae) in each particular #street frontage zone# shall be made on the #encroachment grid# at the height level for which #encroachments# beyond the #half-setback line# are checked. The #encroachment grid# shall include all #street frontage zones#. (Ar) shall include all areas of #compensating recess# in the particular #street frontage zone#, whether or not connected, and (Ae) shall include all #encroachments# in both #Zone B# and #Zone C# in the same #street frontage zone#, whether or not such #encroachments# are connected.

(d) Measurement of #encroachments#

The points at which the formulas are applied will depend upon the shape and dimensions of the #encroachments# beyond the #half-setback line# and shall be in accordance with the provisions of this paragraph and paragraph (e) of this Section.

Where the #encroachments# along a single #street# frontage are not connected outside the #half-setback line#, each #encroachment# shall be measured separately in accordance with the provisions of paragraph (e). However, at any given height, where such non-contiguous #encroachments# occur, the #encroachments# shall be examined together, and the length of #encroachment# (Le) shall be the total of the (Le) for the individual #encroachments#. (See illustration of Non-contiguous #Encroachments#)

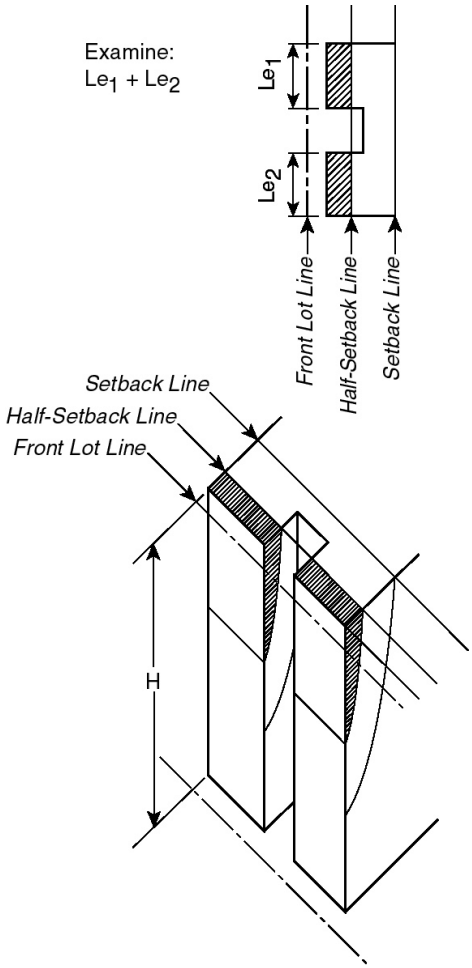

NON-CONTIGUOUS ENCROACHMENTS

(81-265d)

(e) Heights and depths at which formulas are applied

Heights and depths at which the formulas shall be applied are set forth in this paragraph. In addition to meeting the requirements of paragraphs (e)(1) and (e)(2) of this Section, the applicant shall demonstrate that there is no height at which the proposed #building# or #enlargement# fails to comply with the formulas in paragraph (c) of this Section.

(1) Standard requirement where length of #encroachment# is uniform

Where the length of the #encroachment# (Le) is uniform for the entire height of the #encroachment# (H) and the entire depth (De) at every height, the length, depth and height rules expressed in the formulas shall be applied only at the height where (De/D) is greatest and at the outermost edge of the #encroachment#. (See illustration of Uniform Length of #Encroachment#)

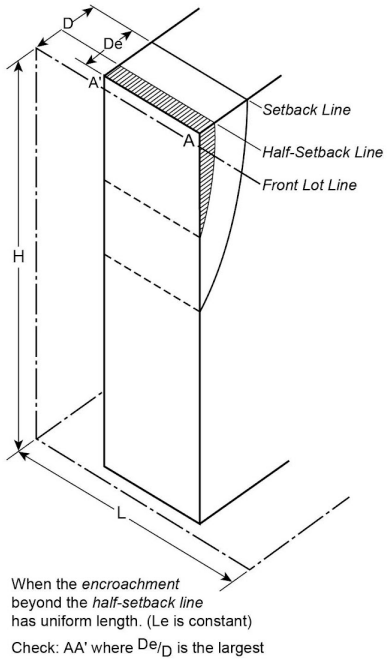

UNIFORM LENGTH OF ENCROACHMENT

(81-265e1)

(2) Standard requirement where length of #encroachment# is not uniform

Where the length of the #encroachment# (Le) is not uniform, the rules shall be applied at the height level where (De/D) is greatest and also at the height level where the length of #encroachment# (Le) is greatest. If the greatest length of #encroachment# is uniform for part of the #building's# height, the rules shall be applied at the highest level at which such greatest length of #encroachment# occurs. (See illustrations Where Length of #Encroachment# Is Not Uniform).

If for a particular height level, the length of the #encroachment# (Le) varies with the depth of the #encroachment# (De), the largest (Le) of this #encroachment# shall be used together with the largest (De) in applying the rules as if the #encroachment# were of uniform length as provided in paragraph (e)(1) of this Section.

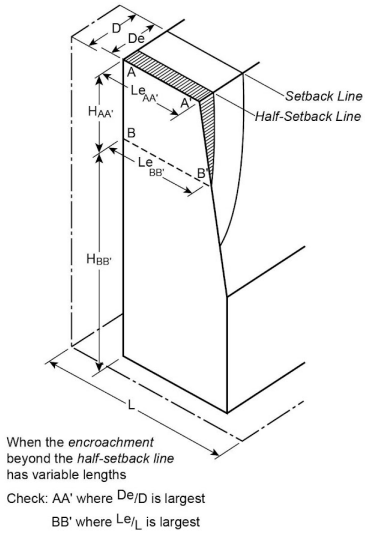

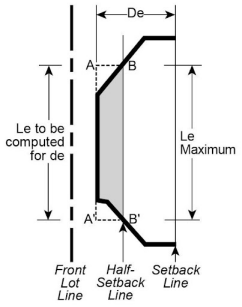

WHERE LENGTH OF ENCROACHMENT IS NOT UNIFORM

(81-265e2)

(f) #Encroachments# by existing #buildings#

When a #zoning lot# contains an existing #building# which encroaches beyond a #half-setback line# or a #ten-foot setback line#, an #enlargement# or #development# on such #zoning lot# shall comply with the following provisions:

(1) Existing #buildings# below specified heights

(i) Except as provided in paragraph (f)(1)(ii) of this Section, an existing #building# not more than 120 feet in height shall not be considered in applying the length and height rules even though a portion of such #building# encroaches beyond the #half-setback line# or #ten-foot setback line# along a 60 foot wide #street# and an existing #building# not more than 150 feet in height shall not be considered in applying the length and height rules even though a portion of such #building# encroaches beyond the #half-setback line# or #ten-foot setback line# along a #street# 75 or more feet in width.

(ii) However, the area occupied by the existing #building# shall be included in the calculation of (Ar/Ae) for the modification of Formula 1 allowed in the case of large areas of #compensating recess#, as set forth in paragraph (c)(2) of this Section.

(2) Existing #buildings# above specified heights

Where an existing #building# more than 120 feet in height encroaches beyond the #half-setback line# or #ten-

foot setback line# along a 60-foot wide #street# or where an existing #building# more than 150 feet in height encroaches beyond the #half-setback line# or #ten-foot setback line# along a #street# 75 or more feet in width, the following provisions, in addition to those of paragraph (d)(3) of Section 81-264 (Encroachments and compensating recesses), shall apply:

(i) no new construction on the #zoning lot# shall encroach beyond the #half-setback line# along any #street#, and

(ii) the length and height rules of this Section shall not apply.

81-266 - Special permit for height and setback modifications

LAST AMENDED
4/28/1988

In C5-3, C6-6 or C6-7 Districts, where a special permit application is made pursuant to Section 74-71 (Landmark Preservation) for modification of #bulk# regulations on a #zoning lot# containing a landmark, or where a special permit application is made pursuant to Section 74-79 for transfer of development rights from a landmark site and the #floor area# represented by such transferred development rights exceeds 20 percent of the basic maximum #floor area# permitted on the #zoning lot# receiving the development rights, such application may include a request for modification of the height and setback regulations set forth in Sections 81-261 to 81-265, inclusive, relating to Height and Setback Regulations - Daylight Compensation. The City Planning Commission may authorize such height and setback modifications subject to the following conditions:

(a) the applicant shall demonstrate to the satisfaction of the Commission that a feasible design for the proposed #development# or #enlargement# which accommodates the permitted #floor area# is not possible under the provisions of Sections 81-261 to 81-265, inclusive, and shall further indicate for the proposed design where and to what extent deficiencies of #compensating recess# are necessary or compliance with the length and height rules is not possible. Scale drawings shall be used in presenting the analyses required herein; and

(b) the Commission shall make the following findings in addition to any required under the applicable provisions of Section 74-71 or Section 74-79:

(1) that the requested departure from the height and setback regulations is the minimum amount necessary to achieve a feasible #building# design;

(2) that the disadvantages to the surrounding area resulting from reduced light and air access will be more than offset by the advantages of the landmark's preservation to the local community and the City as a whole; and

(3) that where the landmark is located on the #zoning lot# proposed for #development# or #enlargement# or on a lot contiguous thereto or directly across a #street# therefrom, the modification of height and setback regulations will adequately protect the setting for the landmark.