Zoning Resolution

THE CITY OF NEW YORK
Eric Adams, Mayor

CITY PLANNING COMMISSION
Daniel R. Garodnick, Chair

# 81-20 - BULK REGULATIONS

File generated by https://zr.planning.nyc.gov on 6/25/2023

## 81-20 - BULK REGULATIONS

LAST AMENDED
8/9/2017

## 81-21 - Floor Area Ratio Regulations

LAST AMENDED
8/9/2017

The #floor area ratio# regulations of the underlying districts are modified in accordance with the provisions of Section 81-21, inclusive, or Section 81-241 (Maximum floor area ratios for a residential building or the residential portion of a mixed building). However, the provisions of Section 81-21, inclusive, shall not apply to #non-residential buildings# or #mixed buildings# in the East Midtown Subdistrict, where the special #floor area# provisions of Sections 81-63 or 81-64 shall apply.

## 81-211 - Maximum floor area ratio for non-residential or mixed buildings

LAST AMENDED
10/7/2021

(a) For #non-residential buildings# or #mixed buildings#, the basic maximum #floor area ratios# of the underlying districts shall apply as set forth in this Section.

(b) In the #Special Midtown District#, the basic maximum #floor area ratio# on any #zoning lot# may be increased by bonuses or other #floor area# allowances only in accordance with the provisions of this Chapter, and the maximum #floor area ratio# with such additional #floor area# allowances shall in no event exceed the amount set forth for each underlying district in the following table:

MAXIMUM FLOOR AREA ALLOWANCES FOR SPECIFIED FEATURES AND MAXIMUM FLOOR AREA RATIOS BY DISTRICTS

| | Maximum #Floor Area Ratio# (FAR) | | | | |
|---|---|---|---|---|---|
| Means for Achieving Permitted FAR Levels on a #Zoning Lot# | C5P | C6-4 C6-5 M1-6 | C5-2.5 C6-4.5 C6-5.5 C6-6.5 | C6-7T | C5-3 C6-6 C6-7 |
| A. Basic Maximum FAR | 8.0 | 10.0 | 12.0 | 14.0 | 15.0 |
| B. Maximum As-of-Right #Floor Area# Allowances: (District-wide Incentives), #Public plazas# - Section 81-23 | — | 1.0[1,2] | 1.0[1,3] | — | 1.0[2] |
| C. Maximum Total FAR with As-of-Right Incentives | 8.0 | 11.0[1,2,7] | 13.0[1,3] | 14.0 | 16.0 |

| | | | | | |
|---|---|---|---|---|---|
| D. Maximum #Floor Area# Allowances:(District-wide Incentives), #Mass Transit Station# - Section 66-51 | 1.6 | 2.0[6] | 2.4 | 2.8 | 3.0 |
| E. Maximum Total FAR with District-wide and As-of-Right Incentives | 9.6 | 12.0 | 14.4 | 16.8 | 18.0 |
| F. Maximum #Floor Area# Allowances in Penn Center Subdistrict: #Mass Transit Station# Improvement - Section 81-541 | — | 2.0 | — | — | 3.0 |
| G. Maximum Total FAR with As-of-Right, District-wide and Penn Center Subdistrict Incentives | — | 12.0 | — | — | 18.0 |
| H. Maximum As-of-Right #Floor Area# Allowances in Theater Subdistrict: | | | | | |
| Development rights (FAR) of a "granting site" - Section 81-744 | — | 10.0 | 12.0 | 14.0 | 15.0 |
| Maximum amount of transferable development rights (FAR) from "granting sites" that may be utilized on a "receiving site" - Section 81-744(a) | — | 2.0 | 2.4 | 2.8 | 3.0 |
| Inclusionary Housing - Sections 23-90 and 81-22 | — | 2.0[4] | — | — | — |
| I. Maximum Total FAR with As-of-Right #Floor Area# Allowances in Theater Subdistrict | — | 12.0 | 14.4 | 16.8 | 18.0 |
| J. Maximum #Floor Area# Allowances by Authorization in Eighth Avenue Corridor - Section 81-744(b) | — | 2.4 | — | — | — |

| | | | | | |
|---|---|---|---|---|---|
| K. Maximum Total FAR with As-of-Right and Theater Subdistrict Authorizations | — | 14.4 | 14.4 | 16.8 | 18.0 |
| L. Maximum Special Permit #Floor Area# Allowances in Theater Subdistrict: Rehabilitation of "listed theaters" Section 81-745 | — | 4.4 | 2.4 | 2.8 | 3.0 |
| M. Maximum Total FAR with Theater Subdistrict, District-wide and As-of-Right Incentives | 9.6 | 14.4[8] | 14.4 | 16.8 | 18.0 |
| N. Maximum FAR of Lots Involving Landmarks: | | | | | |
| Maximum FAR of a lot containing non-bonusable landmark - Section 74-711 or as-of-right | 8.0 | 10.0 | 12.0 | 14.0 | 15.0 |
| Development rights (FAR) of a landmark lot for transfer purposes - Section 74-79 | 8.0 | 10.0 | 13.0[5] | 14.0 | 16.0 |
| Maximum amount of transferable development rights (FAR) from a landmark #zoning lot# that may be utilized on an "adjacent lot" - Section 74-79 | 1.6 | 2.0 | 2.4 | No Limit | No Limit |
| O. Maximum Total FAR of a Lot with Transferred Development Rights from Landmark #Zoning Lot#, Theater Subdistrict Incentives, District-wide Incentives and As-of Right Incentives | 9.6 | 14.4[8] | 14.4 | No Limit | No Limit |

1 Not available for #zoning lots# located wholly within Theater Subdistrict Core

2 Not available within the Eighth Avenue Corridor

3 Not available within 100 feet of a #wide street# in C5-2.5 Districts

[4] Applicable only within that portion of the Theater Subdistrict also located within the #Special Clinton District#

[5] 12.0 in portion of C6-5.5 District within the Theater Subdistrict Core

[6] Within R10 Districts outside of #Inclusionary Housing designated areas# the permitted #floor area# bonus shall be calculated in accordance with Section 66-51 (Additional Floor Area for Mass Transit Station Improvements)

[7] 12.0 for #zoning lots# with full #block# frontage on Seventh Avenue and frontage on West 34th Street, pursuant to Section 81-542 (Retention of floor area bonus for plazas or other public spaces)

[8] For #zoning lots# utilizing a #floor area# bonus pursuant to Section 66-51, such maximum #floor area ratio# shall only be permitted through combination with Inclusionary Housing

## 81-212 - Special provisions for transfer of development rights from landmark sites

LAST AMENDED
8/9/2017

The provisions of Section 74-79 (Transfer of Development Rights From Landmark Sites) shall apply in the #Special Midtown District#, subject to the modification set forth in this Section and Sections 81-254, 81-266 and 81-277 pertaining to special permits for height and setback modifications, Sections 81-63 (Special Floor Area Provisions for the Vanderbilt Corridor Subarea), 81-653 (Special permit for transfer of development rights from landmarks to non-qualifying sites), 81-747 (Transfer of development rights from landmark theaters) and 81-85 (Transfer of Development Rights From Landmark Sites).

The provisions of Section 74-79 pertaining to the meaning of the term "adjacent lot" in the case of lots located in C5-3, C5-5, C6-6, C6-7 or C6-9 Districts are modified to apply in the #Special Midtown District# where the "adjacent lot" is in a C5-3, C6-6, C6-7, C6-5.5, C6-6.5 or C6-7T District.

The provisions of paragraph (c) of Section 74-792 as applied in the #Special Midtown District# shall be subject to the restrictions set forth in the table in Section 81-211 on the development rights (FAR) of a landmark "granting lot" for transfer purposes.

Wherever there is an inconsistency between any provision in Section 74-79 and the table in Section 81-211, the table in Section 81-211 shall apply.

For #developments# or #enlargements# in C5-3, C6-6, C6-7 and C6-7T Districts, the City Planning Commission may also modify or waive the requirements of Section 23-86 (Minimum Distance Between Legally Required Windows and Walls or Lot Lines) and requirements governing the minimum dimensions of a #court#, where:

(a) the required minimum distance as set forth in Section 23-86 is provided between the #legally required windows# in the #development# or #enlargement# and a wall or #lot line# on an adjacent #zoning lot# occupied by the landmark; and

(b) such required minimum distance is provided by a light and air easement on the #zoning lot# occupied by the landmark #building or other structure#, and such easement is acceptable to the Department of City Planning and recorded in the County Clerk's office of the county in which such tracts of land are located.

For #developments# or #enlargements#, on #zoning lots# located in C5-3, C6-6, C6-7 and C6-7T Districts and with frontage on #streets# on which curb cuts are restricted, pursuant to Section 81-44, the Commission may also modify or waive the number of loading berths required pursuant to Section 36-62. In granting such special permit, the Commission shall find that:

(1) a loading berth permitted by Commission authorization, pursuant to Section 81-44, would have an adverse impact on the landmark #building or other structure# that is the subject of the special permit;

(2) because of existing #buildings# on the #zoning lot#, there is no other feasible location for the required loading berths; and

(3) the modification or waiver will not create or contribute to serious traffic congestion or unduly inhibit vehicular and pedestrian movement. For #developments# or #enlargements#, on #zoning lots# located in C5-3, C6-6, C6-7 and C6-7T Districts, the

Commission may also modify the dimensions and minimum clear height required for pedestrian circulation space, pursuant to Sections 37-50 and 81-45. In granting such special permit, the Commission shall find that the modification will result in a distribution of #bulk# and arrangement of #uses# on the #zoning lot# that relate more harmoniously with the landmark #building or other structure# that is the subject of the special permit.

## 81-213 - Special provisions for transfer of development rights from listed theaters within the Special Clinton District

LAST AMENDED
9/13/2006

In C6-2 Districts within the #Special Clinton District#, for #zoning lots#, or portions thereof, comprised of listed theaters designated in Section 81-742, the City Planning Commission shall allow a transfer of development rights pursuant to Section 81-744 (Transfer of development rights from listed theaters). The basic maximum #floor area ratio# for transfer purposes for such #zoning lots#, or portions thereof, shall be 6.02.

## 81-22 - As-of-right Floor Area Bonuses

LAST AMENDED
10/17/2007

As-of-right #floor area# bonuses are not permitted in the #Special Midtown District#, except in accordance with the provisions of the following Section:

Section 81-23 (Floor Area Bonus for Public Plazas).

In addition, the provisions of Section 23-90 (INCLUSIONARY HOUSING) shall be applicable in that portion of the #Special Midtown District# which is also within the #Special Clinton District#, pursuant to Section 81-023 (Applicability of the Special Clinton District regulations).

Any #floor area# bonus granted by certification for through #block# gallerias prior to August 6, 1998, shall remain in effect provided, however, that such certification shall automatically lapse if substantial construction, in accordance with the plans for which such certification was granted, has not been completed within four years from the effective date of such certification.

## 81-23 - Floor Area Bonus for Public Plazas

LAST AMENDED
8/9/2017

Within the #Special Midtown District#, for each square foot of #public plaza# provided on a #zoning lot#, the basic maximum #floor area# permitted on that #zoning lot# under the provisions of Section 81-211 (Maximum floor area ratio for non-residential or mixed buildings) may be increased by six square feet, provided that in no case shall such bonus #floor area# exceed a #floor area ratio# of 1.0.

This Section shall be applicable in all underlying districts throughout the #Special Midtown District#, except that there shall be no #floor area# bonus for a #public plaza# that is:

(a) on #zoning lots# in the C5P District within the Preservation Subdistrict;

(b) within 50 feet of a #street line# of a designated #street# on which retail or #street wall# continuity is required, pursuant to Sections 81-42 (Retail Continuity Along Designated Streets) or 81-43 (Street Wall Continuity Along Designated Streets);

(c) on a #zoning lot#, any portion of which is within the Theater Subdistrict Core, as defined in Section 81-71 (General Provisions); and

(d) on #zoning lots#, any portion of which is in the Grand Central Core Area, as shown on Map 2 (East Midtown Subdistrict and Subareas) in Appendix A of this Chapter, or on #qualifying sites#, as defined in Section 81-613, in any other subarea of the East

Midtown Subdistrict.

All #public plazas# provided within the #Special Midtown District# shall comply with the requirements for #public plazas# set forth in Section 37-70, inclusive.

A major portion of a #public plaza# may overlap with a sidewalk widening which may be provided to fulfill the minimum pedestrian circulation space requirements set forth in Section 81-45 (Pedestrian Circulation Space), provided that the overlapping portion of the #public plaza# also conforms to the design standards of Section 37-50 (REQUIREMENTS FOR PEDESTRIAN CIRCULATION SPACE) for a sidewalk widening. Such sidewalk widening may be included in the major portion of a #public plaza# for purposes of calculating the proportional restrictions set forth in Section 37-715.

## 81-231 - Existing plazas or other public amenities

LAST AMENDED
10/17/2007

(a) Elimination or reduction in size of existing #publicly accessible open area# or other public amenities

No existing #publicly accessible open area# or other public amenity, open or enclosed, for which a #floor area# bonus has been utilized, shall be eliminated or reduced in size, except by special permit of the City Planning Commission, pursuant to Section 74-761 (Elimination or reduction in size of bonused public amenities).

(b) Kiosks and open air cafes

Kiosks and open air cafes may be placed within an existing #publicly accessible open area# for which a #floor area# bonus has been received by certification, pursuant to Section 37-73 (Kiosks and Open Air Cafes).

(c) Nighttime closing of existing #publicly accessible open areas#

The Commission may, upon application, authorize the closing of an existing #publicly accessible open area# for which a #floor area# bonus has been received, during certain nighttime hours, pursuant to Section 37-727 (Hours of access).

(d) Special provisions for certain #covered pedestrian spaces#

Where a portion of an existing #covered pedestrian space# was designated by a special authorization of the Commission prior to May 13, 1982, to be used for off-street loading after business hours, the Commission may, by special permit, after public notice and hearing, and subject to City Council action, allow relocation of the loading facilities and modifications relating to the loading berth requirements, provided that such modifications will result in substantial improvement of the pedestrian circulation system and amenities within the existing #covered pedestrian space# without adversely affecting the operation of off-street loading facilities.

(e) Elimination or reduction in size of non-bonused open area on a #zoning lot# containing a bonused amenity

Any existing open area for which a #floor area# bonus has not been utilized that occupies the same #zoning lot# as an existing #publicly accessible open area# or other public amenity, open or enclosed, for which a #floor area# bonus has been utilized, may be reduced in size or eliminated only upon certification of the Chairperson of the City Planning Commission that all bonused amenities comply with the standards under which such #floor area# bonus was granted.

## 81-232 - Special provisions for zoning lots divided by district boundaries

LAST AMENDED
10/17/2007

Where a #public plaza# is located on a #zoning lot# divided by a district boundary, the #floor area# bonus for such #public plaza# may be credited to either portion of the #zoning lot# regardless of the #public plaza's# location or the date when the #zoning lot# was created,

provided that the amount of such bonus permitted on either portion of the #zoning lot# shall not exceed the maximum amount that would be permitted on such portion if it were a separate #zoning lot# and subject to all other applicable provisions of Article VII, Chapter 7.

## 81-24 - Floor Area, Lot Coverage and Building Spacing Regulations for Residential Uses

LAST AMENDED
7/26/2001

## 81-241 - Maximum floor area ratios for a residential building or the residential portion of a mixed building

LAST AMENDED
2/2/2011

For #residential buildings# or #residential# portions of #mixed buildings# in the #Special Midtown District#, the maximum #floor area ratio# for each underlying district is as follows:

(a) In the C5-P District the maximum #floor area ratio# is 8.0, and no additional #floor area# shall be allowed above this limit.

(b) In all underlying districts other than the C5-P District, except as provided in paragraph (c) of this Section, the maximum #residential# #floor area ratio# is 10.0.

(c) In any underlying district other than a C5-P, C6-4 or C6-5 District, or in a C6-4 or C6-5 District within the Theater Subdistrict where a #zoning lot# has been granted bonus #floor area# or other #floor area# allowances in accordance with the provisions of Section 81-741 (General provisions), such #zoning lot# shall qualify for a maximum #residential# #floor area ratio# of 12.0 if the #development# or the #building# containing the #enlargement# includes recreational space for the #residential# occupants in an amount not less than 13 square feet for each #rooming unit#, 16.25 square feet for each #dwelling unit#, or a total area of at least 5,000 square feet, whichever is greater. The recreational space may be located at any level including a roof. Such recreational space shall:

(1) be restricted to #residential# occupants of the #development# or the #building# containing the #enlargement# and their guests, for whom no admission or membership fees may be charged;

(2) be directly accessible from a lobby or other public area served by the #residential# elevators;

(3) be landscaped, including trees or shrubbery, except where covered or developed with recreational facilities and seating areas;

(4) contain not less than 500 square feet of continuous area on a single level with no dimension of less than 15 feet;

(5) have not less than 50 percent of the area open from its lowest level to the sky. The remaining portion may be roofed and up to 50 percent of its perimeter may be enclosed. In no event may more than 25 percent of the required recreational space be fully enclosed. All enclosures shall be transparent except when located within the #building#. Covered areas shall contain recreational facilities or seating areas.

A copy of requirements (c)(1) through (c)(5), as set forth in this Section, shall be permanently posted in a conspicuous place within each recreational space.

## 81-242 - Regulations on minimum spacing between buildings

LAST AMENDED
2/2/2011

When a #building# containing #residential# #uses# is located on the same #zoning lot# as another #building#, the provisions of Section 23-70 (MINIMUM REQUIRED DISTANCE BETWEEN TWO OR MORE BUILDINGS ON A SINGLE ZONING LOT) shall not apply.

## 81-25 - General Provisions Relating to Height and Setback of Buildings

LAST AMENDED
8/9/2017

For all #buildings# in the #Special Midtown District#, except as provided in Section 81-90 (SPECIAL REGULATIONS FOR PRESERVATION SUBDISTRICT), the height and setback regulations of the underlying districts are superseded by the provisions of this Section and by the two alternate sets of regulations controlling the height and setback of #buildings# as set forth in Sections 81-26 (Height and Setback Regulations--Daylight Compensation) and 81-27 (Alternate Height and Setback Regulations--Daylight Evaluation), respectively. For the purposes of applying height and setback regulations, the term "#buildings#" shall include #buildings or other structures#, except if specifically stated otherwise.

For the purposes of Sections 81-25 through 81-27, inclusive, all #buildings# on a #zoning lot# shall be considered a single #building#. Existing portions of such #buildings# are referred to as an "existing #building#." A "new #building#" shall include #developments#, #enlargements# or alterations that increase the width or height of a #building# wall.

An applicant for plan approval by the Department of Buildings may elect to be governed by the provisions of either Section 81-26 or 81-27 in addition to the provisions of this Section.

This Section sets forth the provisions that are common to both sets of regulations.

## 81-251 - Purpose of height and setback regulations

LAST AMENDED
2/2/2011

The common purpose of these two sets of regulations is to offer maximum design flexibility while setting reasonable but firm standards to protect access of light and air to public #streets# and adjacent #buildings#.

This purpose is implemented by the two alternate sets of regulations, which are based on two distinct approaches. Both sets are concerned with daylight at #street# level.

The daylight compensation regulations require any #building# generally to be built within a sky exposure curve which relates required setbacks to #building# heights. Within limits, the #buildings# may encroach outside the curve but only if extra setbacks or recesses provided elsewhere on the same #street# frontage of the #zoning lot# compensate for the #encroachment#. In the regulations, the sky exposure curve for three #street# width categories is represented in each case by a table of required setbacks related to #building# heights.

The daylight evaluation regulations measure and evaluate portions of sky blocked by a #building# as viewed from specified #vantage points# in the #street#. The #building# is plotted on #daylight evaluation charts# representing the #zoning lot's# available daylight from specified #vantage points#, measured in daylight squares as defined in paragraph (b) of Section 81-272. Daylight blockage by the #building# is then measured to determine the #building's# score on each frontage and the average score for the #building# as a whole. The regulations specify the minimum passing scores for compliance.

## 81-252 - Permitted obstructions

LAST AMENDED
4/30/2012

Except as set forth in this Section, structures which under the provisions of Sections 33-42 or 43-42 (Permitted Obstructions) or 34-11 or 35-10 (GENERAL PROVISIONS), are permitted to penetrate a maximum height limit or a #sky exposure plane# shall not be permitted as exceptions to the height limitations, setback requirements or rules for the measurement of #encroachments# or #compensating recesses# set forth in Section 81-26 (Height and Setback Regulations—Daylight Compensation), nor shall they be excluded in determining daylight blockage pursuant to the provisions of Section 81-27 (Alternate Height and Setback Regulations—Daylight Evaluation).

The following shall be permitted as exceptions to the height regulations, setback requirements or rules for the measurement of

#encroachments# or #compensating recesses#, set forth in Section 81-26, and shall be excluded in determining daylight blockage, pursuant to the provisions of Section 81-27:

(a) unenclosed balconies conforming to the provisions of Section 23-13 (Balconies); and

(b) exterior wall thickness, up to eight inches, where such wall thickness is added to the exterior face of a #building# wall existing on April 30, 2012, provided the added wall thickness has a thermal resistance (R-value) of at least 1.5 per inch. Where #buildings# that have added exterior wall thickness pursuant to this Section are #enlarged#, such #enlarged# portion may similarly penetrate a maximum height limit in order to align with the exterior walls of the existing #building#, provided such #enlargement# contains less #floor area# than the existing #building#, and there is no penetration of #floor area# above a maximum height limit.

## 81-253 - Special provisions for the East Midtown, Theater, Fifth Avenue, Penn Center and Preservation Subdistricts

LAST AMENDED
8/9/2017

The provisions of Sections 81-26 (Height and Setback Regulations-- Daylight Compensation) and 81-27 (Alternate Height and Setback Regulations--Daylight Evaluation) are supplemented and modified by special provisions applying in the Fifth Avenue Subdistrict, as set forth in Sections 81-81 (General Provisions) and 81-83 (Special Street Wall Requirements) or in the Theater Subdistrict as set forth in Sections 81-71 (General Provisions) and 81-75 (Special Street Wall and Setback Requirements) or in the East Midtown Subdistrict as set forth in Sections 81-61 (General Provisions), 81-66 (Special Height and Setback Requirements), inclusive, or 81-671 (Special street wall requirements), or in the Penn Center Subdistrict as set forth in Section 81-532 (Special street wall requirements).

The provisions of Sections 81-26 and 81-27 are not applicable in the Preservation Subdistrict, where height and setback is regulated by the provisions of Section 81-90 (SPECIAL REGULATIONS FOR PRESERVATION SUBDISTRICT).

## 81-254 - Special permit for height and setback modifications

LAST AMENDED
8/9/2017

In the #Special Midtown District#, the City Planning Commission may modify the special height and setback regulations set forth in this Chapter only in accordance with the following provisions:

Section 74-711 (Landmark preservation in all districts) as modified by the provisions of Sections 81-266 or 81-277 (Special permit for height and setback modifications)

Section 74-79 (Transfer of Development Rights From Landmark Sites) where development rights are transferred from a landmark site to an adjacent lot in a C5-3, C6-6 or C6-7 District, as modified by Section 81-212, and the total #floor area# on the adjacent lot resulting from such transfer exceeds the basic maximum #floor area ratio# by more than 20 percent. In such cases, the granting of a special permit by the Commission for height and setback modifications shall be in accordance with the provisions of Sections 81-266 or 81-277

Section 81-066 (Special permit modifications of Section 81-254, Section 81-40 and certain Sections of Article VII, Chapter 7)

Section 81-632 (Special permit for transfer of development rights from landmarks to the Vanderbilt Corridor Subarea)

Section 81-633 (Special permit for Grand Central public realm improvements)

Section 81-685 (Special permit to modify qualifying site provisions)

## 81-26 - Height and Setback Regulations--Daylight Compensation

LAST AMENDED

## 81-261 - Definitions

LAST AMENDED
2/2/2011

Compensating recess

A portion of a #zoning lot# which, at the #building# height selected for determining compliance with the provisions of Section 81-26 (Height and Setback Regulations--Daylight Compensation), lies in the #free zone# (Zone A on the #encroachment grid#), is not covered by any portion of a #building# and qualifies as compensating for #encroachments# beyond the #free zone# under the provisions of Section 81-264 (Encroachments and compensating recesses). (See illustration of #Compensating Recess# and #Encroachment#)

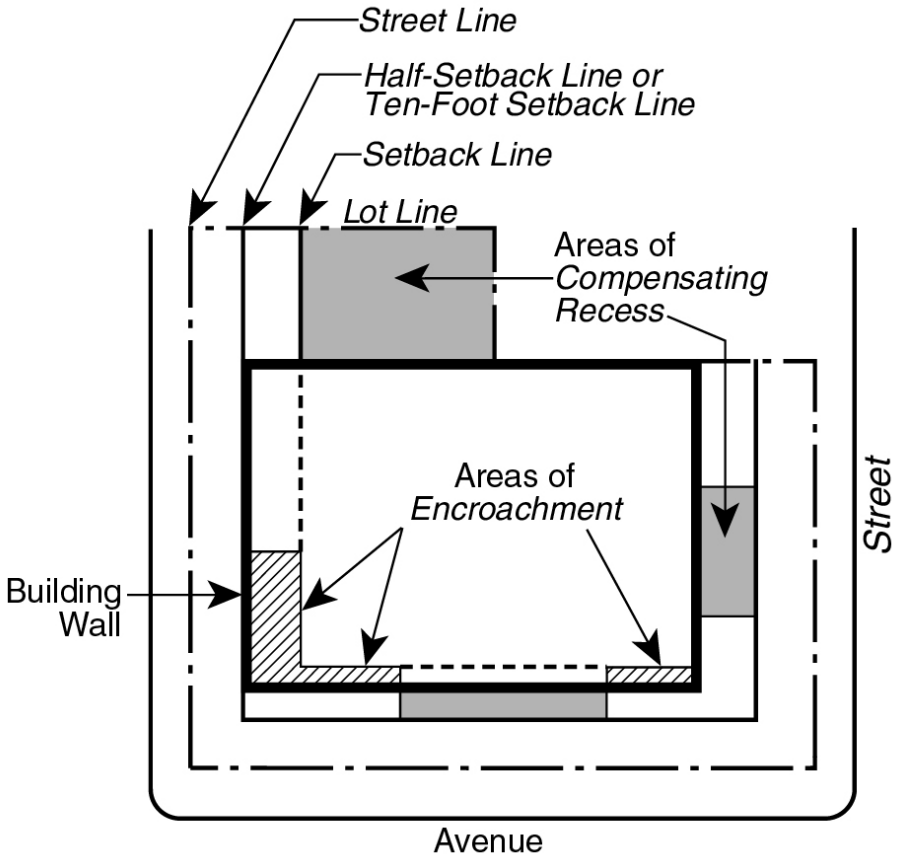


COMPENSATING RECESS AND ENCROACHMENT

(81-261.1)

Encroachment

A projection beyond the #setback line#, the #free zone# or the #half-setback line# by any portion of a #building# that exceeds the maximum height permitted at the #street line#. (See illustration of #Compensating Recess# and #Encroachment#)

Encroachment grid

A plan drawing of the #zoning lot# at any given height above #curb level# selected to determine compliance with the provisions of Section 81-26 and showing, for that height, #street lines#, #setback lines#, #half-setback lines#, #Zone A# (the #free zone#), #Zone B# and #Zone

C# (#encroachment zones#) and, where applicable, the #ten-foot setback line#. The #encroachment grid# serves as a device for measuring areas of #encroachment# beyond the #free zone# and areas of #compensating recess# within the #free zone#. (See illustration of #Encroachment Grid#)

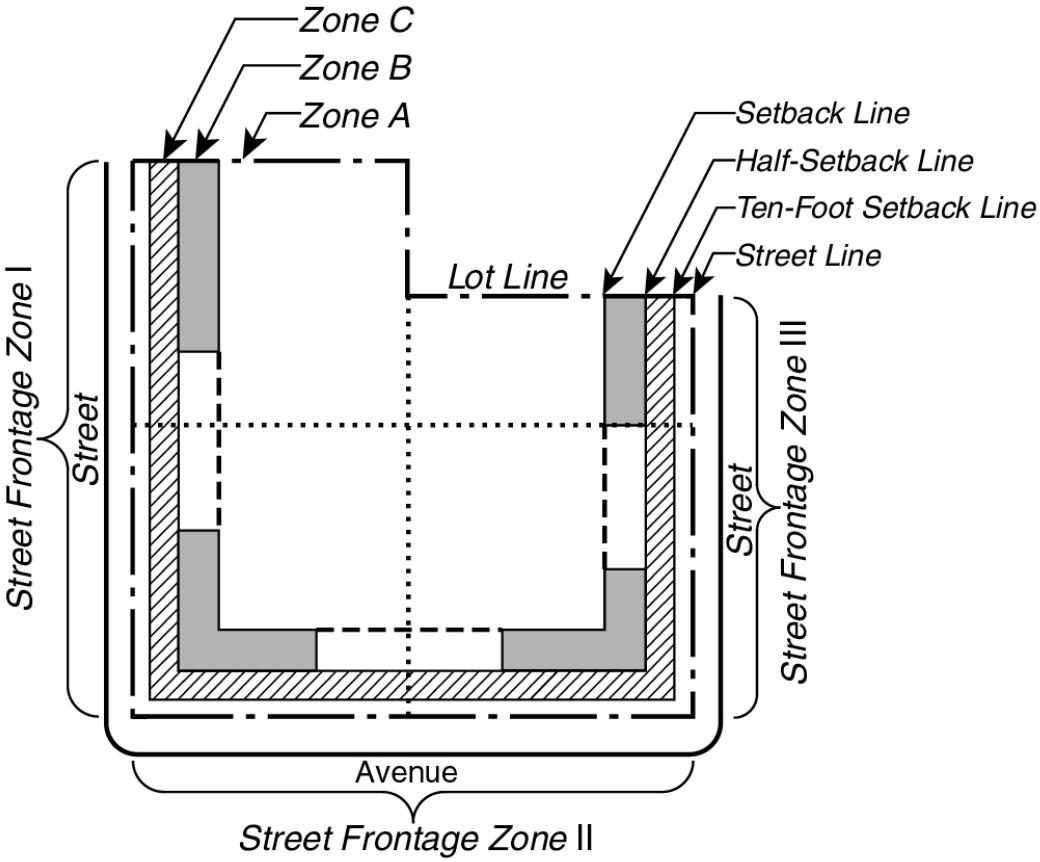


ENCROACHMENT GRID

(81-261.2)

Free zone

That portion of a #zoning lot#, at any given height, which may be covered by a #building# without coverage constituting an #encroachment# that requires daylight compensation.

In addition to the area that lies behind a #setback line# or #setback lines#, the #free zone# shall include areas between the #setback line# and either the #half-setback line# or the #ten-foot setback line#, whichever is further from the #street line#, and which qualify as #free zone# areas under the #middle one-third rule#. The #free zone# is referred to as #Zone A# on the #encroachment grid#.

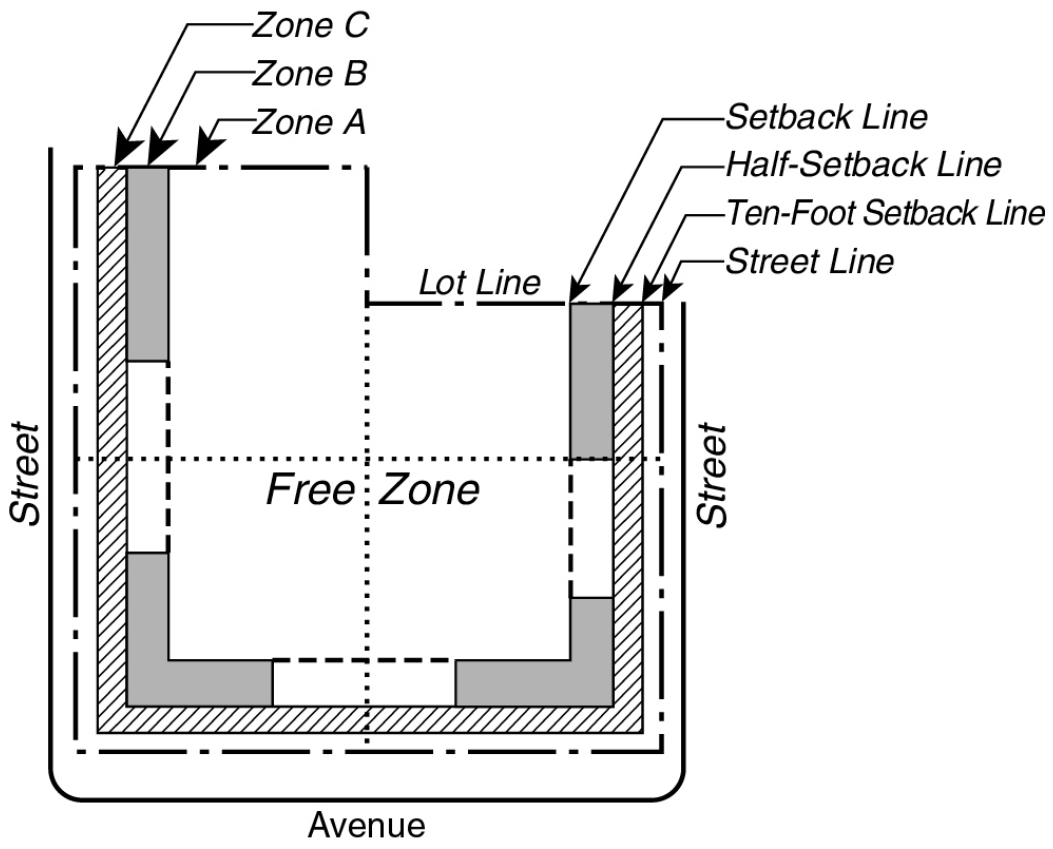


FREE ZONE

(81-261.3)

Half-setback line

A line drawn parallel to a #street line# and halfway between the #street line# and the #setback line#. (See illustration of #Setback Line# and #Half-Setback Line#)

Middle one-third rule

The rule under which, for the middle one-third of the #front lot line# length, the #free zone# includes area between the #setback line# and either the #half-setback line# or the #ten-foot setback line#, whichever is further from the #street line#. However, on a #corner lot# the #free zone# does not extend beyond the #setback line# along an intersecting #street#. (See illustrations of #Middle One-Third Rule#)

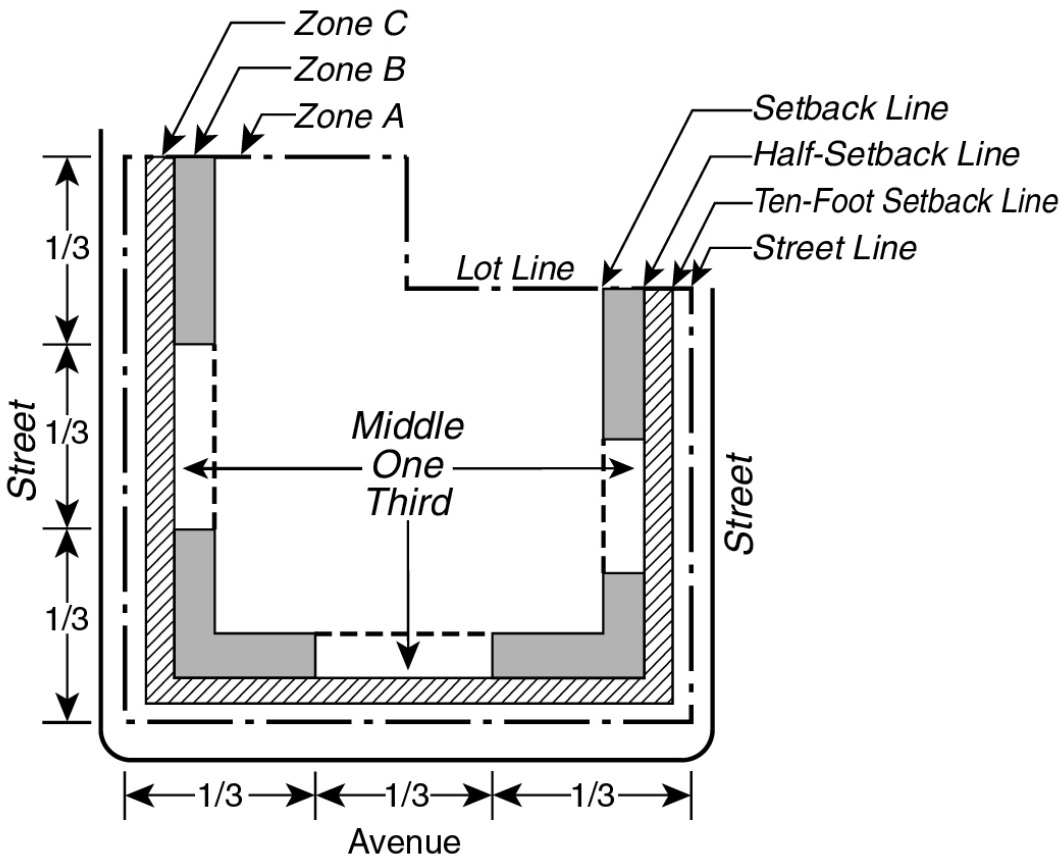


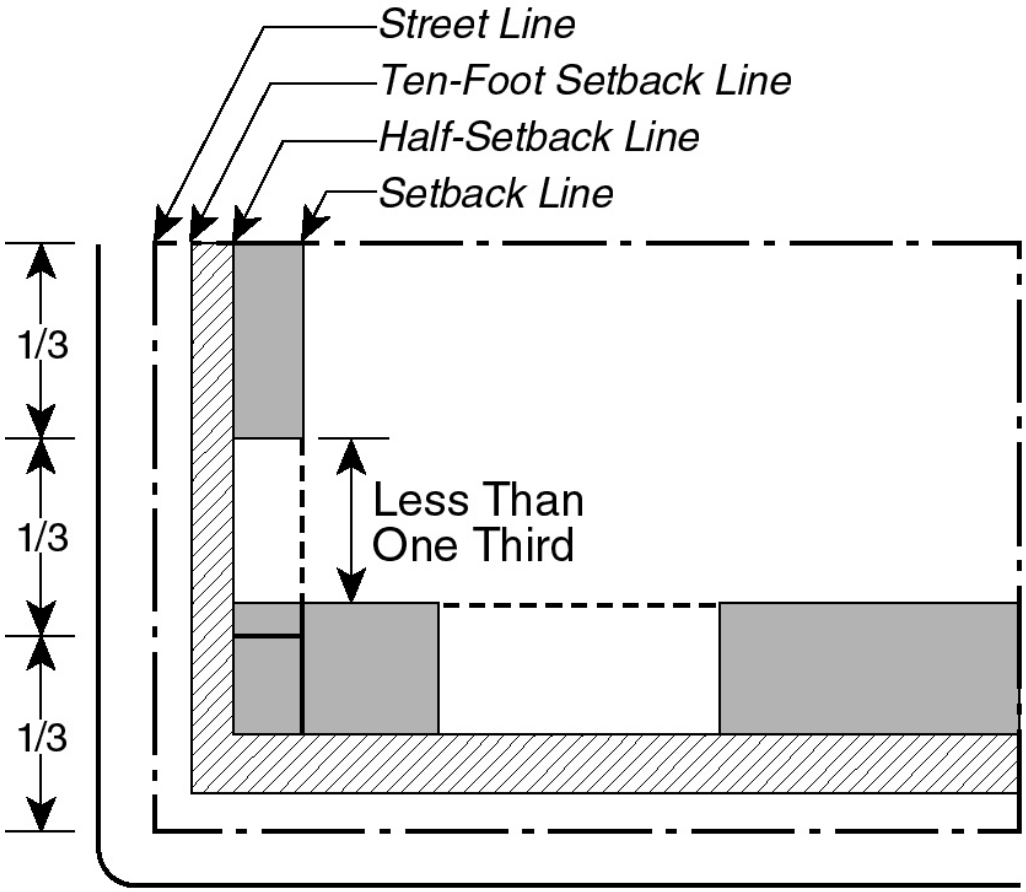


MIDDLE ONE-THIRD RULE

(81-261.4)

Setback line

A line drawn in plan parallel to a #street line# and showing for a given #building# height the minimum depth to which a #building# is required to be set back from the #street line# by the applicable depth to height chart in Section 81-263 (Standard setback requirements). Required setbacks, established by the chart, increase with the #building's# height. (See illustration of #Setback Line# and #Half-Setback Line#)

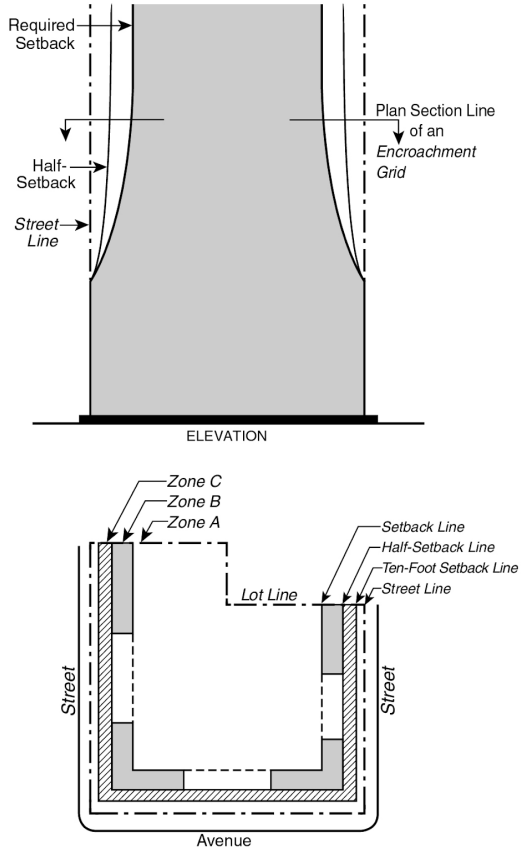


SETBACK LINE AND HALF-SETBACK LINE

(81-261.5)

Street frontage zone

A portion of a #zoning lot# which lies within an area bounded by a continuous #front lot line# and either the center line of the #block# or a line 100 feet distant from and parallel to that #front lot line#, whichever is closer to that #front lot line#. There shall be a #street frontage zone# for each #zoning lot# #street# frontage. (See illustration of #Street Frontage Zones#)

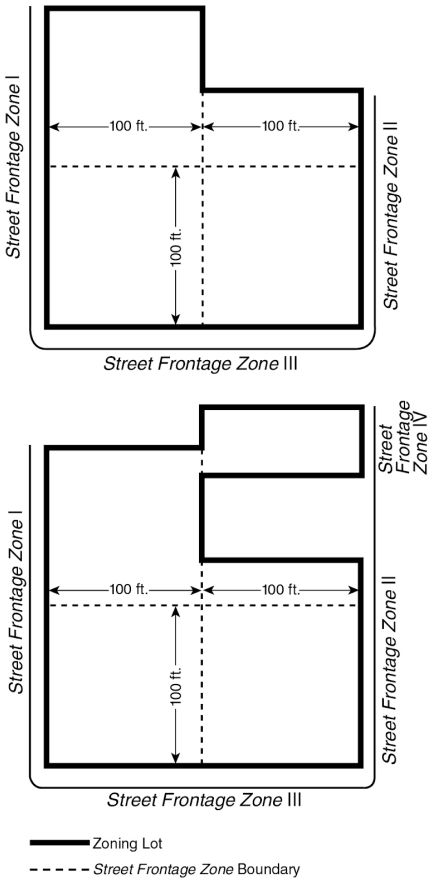


STREET FRONTAGE ZONES

(81-261.6)

Ten-foot setback line

A line which is parallel to the #street line# at a depth of 10 feet and represents the minimum distance any portion of a #building# exceeding the maximum height at the #street line# is required to be set back from the #street line#. A greater setback distance may be required by a #setback line# or a #half-setback line# depending upon the #building# height for which such #setback line# or #half-setback line# is established.

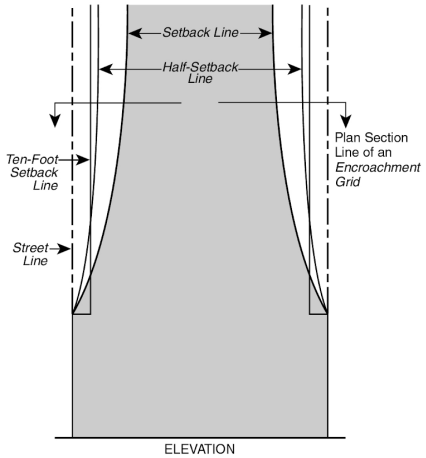


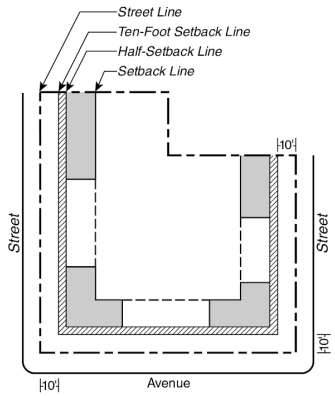


TEN-FOOT SETBACK LINE ON AN ENCROACHMENT GRID

(81-261.7)

Zone A, Zone B, Zone C

"Zone A," "Zone B" and "Zone C" are zones on an #encroachment grid# defined as follows:

(a) #Zone A# is the #free zone#.

(b) #Zone B#, an #encroachment# zone, is the zone, exclusive of any area in #Zone A# and any area closer to the #street line# than the #ten-foot setback line#, which lies between the #setback line# and either the #half-setback line# or the #ten-foot setback line#, whichever is further from the #street line#.

(c) #Zone C#, an #encroachment# zone and penalty zone, is the zone, exclusive of any area closer to the #street line# than the #ten-foot setback line#, which lies between the #half-setback line# and the #ten-foot setback line#.

## 81-262 - Maximum height of front wall at the street line

LAST AMENDED
5/13/1982

(a) General provisions

The front wall of a #building# at the #street line# shall not exceed the height limit applying along the #street# on which it fronts. Maximum front wall heights at the #street line# vary with the width of the #street# on which the wall fronts, as follows:

| #Street# Width (in feet) | Maximum Front Wall Height at #Street Line# (in feet) |
|---|---|
| 60 or less | 90 |
| 75 or 80 | 120 |
| 100 or more | 150 |

(b) Special provisions for #corner lots#

For a #corner lot# with frontage on #streets# of different widths, the maximum front wall height at the #street line# of the narrower #street# may be increased above that indicated in paragraph (a) in accordance with either one of the following rules:

Rule 1:

The maximum front wall height at the #street line# for the wider #street# may extend up to 100 feet from the corner along the #street line# of the narrower #street#; or

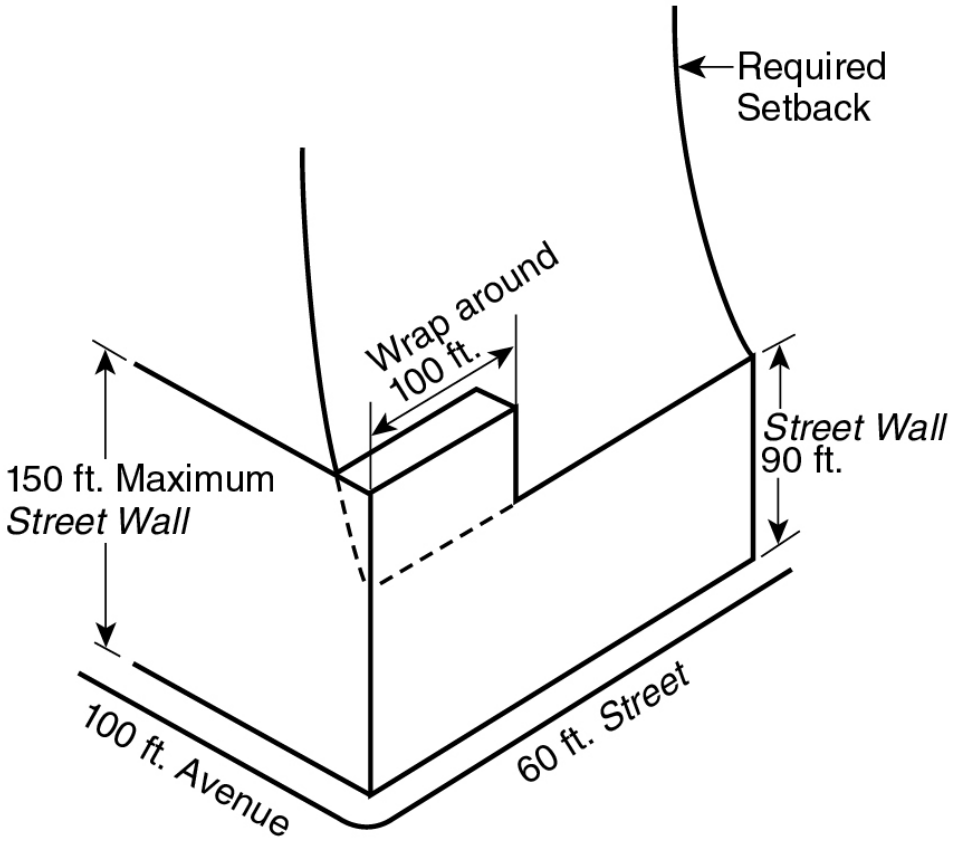


SPECIAL RULE 1 FOR CORNER LOTS

(81-262b.1)

Rule 2:

For any length of frontage from the corner along the narrower #street#, a maximum height for such length of frontage may apply, which shall be the weighted average of (1) the height permitted under Rule 1 for the first 100 feet from the corner, and (2) the standard height limit for front walls on the narrower #street# for the remainder of the frontage. (See illustration of Special Rules for #Corner Lots#)

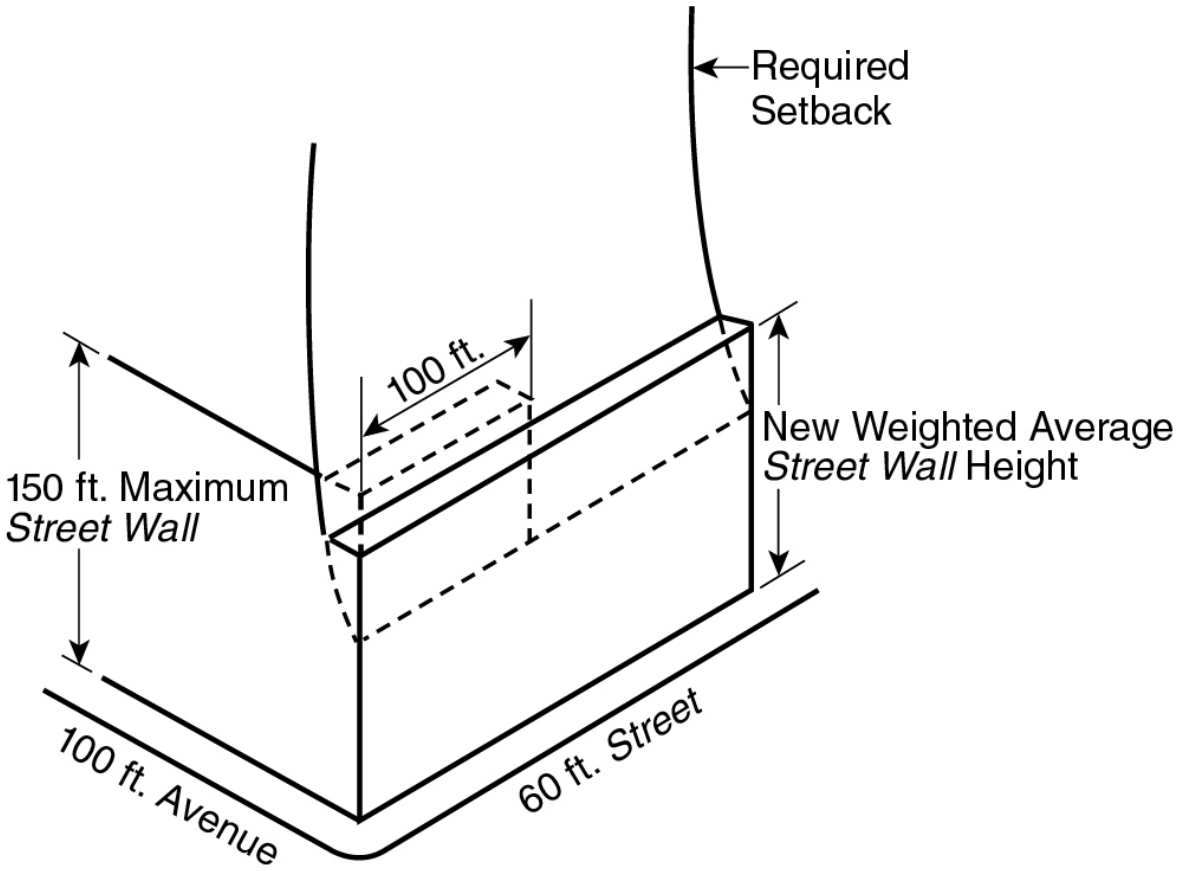


SPECIAL RULE 2 FOR CORNER LOTS

(81-262b.2)

## 81-263 - Standard setback requirements

LAST AMENDED
2/2/2011

#Buildings# shall comply with the regulations of this Section.

(a) Ten-foot setback requirement

Above the maximum height permitted at the #street line# pursuant to the provisions of Section 81-262, every portion of a #building# shall be set back at least 10 feet from the #street line#.

(b) General setback provisions; depth to height charts

Above the maximum height permitted at the #street line#, #buildings#, in addition to meeting the requirements of paragraph (a) of this Section, are required to be set back behind the applicable #setback line#, the depth of the #setback line# at any point depending upon the height of the wall at that point in accordance with the requirements of applicable Tables A, B or C of this Section presenting required setbacks from #streets# 60 feet or less, 75 or 80 feet, or 100 or more feet in width, respectively.

Table A

SETBACK REQUIREMENTS

ON #STREETS# 60 FEET OR LESS IN WIDTH

Depth of #Setback Line# from #Street Line# at

Stated Heights above #Curb Level#.

| Height | Depth of #Setback Line# |
|---|---|
| 90 | 0.00 |
| 100 | 2.00 |
| 110 | 4.00 |
| 120 | 6.00 |
| 130 | 8.00 |
| 140 | 10.00 |
| 150 | 12.00 |
| 160 | 13.75 |
| 170 | 15.25 |
| 180 | 16.75 |
| 190 | 18.50 |
| 200 | 20.00 |
| 210 | 21.25 |
| 220 | 22.50 |
| 230 | 24.00 |
| 240 | 25.25 |

| | |
|---|---|
| 250 | 26.50 |
| 260 | 27.50 |
| 270 | 28.75 |
| 280 | 30.00 |
| 290 | 30.75 |
| 300 | 31.75 |
| 310 | 32.75 |
| 320 | 33.75 |
| 330 | 34.75 |
| 340 | 35.50 |
| 350 | 36.25 |
| 360 | 37.25 |
| 370 | 38.00 |
| 380 | 38.75 |
| 390 | 39.50 |
| 400 | 40.25 |
| 410 | 41.00 |
| 420 | 41.75 |
| 430 | 42.25 |
| 440 | 43.00 |
| 450 | 43.50 |

| | |
|---|---|
| 460 | 44.25 |
| 470 | 44.75 |
| 480 | 45.50 |
| 490 | 46.00 |
| 500 | 46.50 |
| 510 | 47.00 |
| 520 | 47.50 |
| 530 | 48.00 |
| 540 | 48.50 |
| 550 | 49.00 |
| 560 | 49.50 |
| 570 | 50.00 |
| 580 | 50.50 |
| 590 | 51.00 |
| 600 | 51.50 |
| 610 | 52.00 |
| 620 | 52.25 |
| 630 | 52.75 |
| 640 | 53.00 |
| 650 | 53.50 |
| 660 | 53.75 |

| | |
|---|---|
| 670 | 54.25 |
| 680 | 54.50 |
| 690 | 55.00 |
| 700 | 55.25 |
| 710 | 55.75 |
| Above 710 | For every 10 feet the depth shall increase by one foot |

Table B

SETBACK REQUIREMENTS

ON #STREETS# 75 OR 80 FEET WIDE

Depth of #Setback Line# from #Street Line# at

Stated Heights above #Curb Level#.

| Height | Depth of #Setback Line# |
|---|---|
| 120 | 0.00 |
| 130 | 1.50 |
| 140 | 3.50 |
| 150 | 5.50 |
| 160 | 7.50 |
| 170 | 9.25 |
| 180 | 11.00 |
| 190 | 12.75 |
| 200 | 14.25 |
| 210 | 15.75 |

| | |
|---|---|
| 220 | 17.25 |
| 230 | 18.75 |
| 240 | 20.00 |
| 250 | 21.25 |
| 260 | 22.50 |
| 270 | 23.75 |
| 280 | 24.75 |
| 290 | 26.00 |
| 300 | 27.00 |
| 310 | 28.00 |
| 320 | 29.00 |
| 330 | 30.00 |
| 340 | 31.00 |
| 350 | 32.00 |
| 360 | 32.75 |
| 370 | 33.75 |
| 380 | 34.50 |
| 390 | 35.50 |
| 400 | 36.25 |
| 410 | 37.00 |
| 420 | 37.75 |

| | |
|---|---|
| 430 | 38.25 |
| 440 | 39.00 |
| 450 | 39.75 |
| 460 | 40.50 |
| 470 | 41.00 |
| 480 | 41.75 |
| 490 | 42.50 |
| 500 | 43.00 |
| 510 | 43.50 |
| 520 | 44.00 |
| 530 | 44.75 |
| 540 | 45.25 |
| 550 | 45.75 |
| 560 | 46.25 |
| 570 | 46.75 |
| 580 | 47.25 |
| 590 | 47.75 |
| 600 | 48.25 |
| 610 | 48.75 |
| 620 | 49.00 |
| 630 | 49.50 |

| | |
|---|---|
| 640 | 50.00 |
| 650 | 50.50 |
| 660 | 50.75 |
| 670 | 51.25 |
| 680 | 51.75 |
| 690 | 52.00 |
| 700 | 52.50 |
| 710 | 53.00 |
| Above 710 | For every 10 feet the depth shall increase by one foot |

Table C

SETBACK REQUIREMENTS

ON #STREETS# AT LEAST 100 FEET WIDE

Depth of #Setback Line# from #Street Line# at

Stated Heights above #Curb Level#.

| Height | Depth of #Setback Line# |
|---|---|
| 150 | 0.00 |
| 160 | 1.50 |
| 170 | 3.00 |
| 180 | 5.00 |
| 190 | 6.75 |
| 200 | 8.50 |
| 210 | 10.25 |

| | |
|---|---|
| 220 | 11.75 |
| 230 | 13.25 |
| 240 | 14.75 |
| 250 | 16.00 |
| 260 | 17.25 |
| 270 | 18.75 |
| 280 | 20.00 |
| 290 | 21.00 |
| 300 | 22.25 |
| 310 | 23.50 |
| 320 | 24.50 |
| 330 | 25.50 |
| 340 | 26.50 |
| 350 | 27.50 |
| 360 | 28.50 |
| 370 | 29.50 |
| 380 | 30.25 |
| 390 | 31.25 |
| 400 | 32.00 |
| 410 | 33.00 |
| 420 | 33.75 |

| | |
|---|---|
| 430 | 34.50 |
| 440 | 35.25 |
| 450 | 36.00 |
| 460 | 36.75 |
| 470 | 37.25 |
| 480 | 38.00 |
| 490 | 38.75 |
| 500 | 39.25 |
| 510 | 40.00 |
| 520 | 40.50 |
| 530 | 41.25 |
| 540 | 41.75 |
| 550 | 42.25 |
| 560 | 42.75 |
| 570 | 43.50 |
| 580 | 44.00 |
| 590 | 44.50 |
| 600 | 45.00 |
| 610 | 45.50 |
| 620 | 46.00 |
| 630 | 46.50 |

| | |
|---|---|
| 640 | 47.00 |
| 650 | 47.50 |
| 660 | 47.75 |
| 670 | 48.25 |
| 680 | 48.75 |
| 690 | 49.25 |
| 700 | 49.50 |
| 710 | 50.00 |
| Above 710 | For every 10 feet the depth shall increase by one foot |

(c) Use of tables

To comply with the setback requirements of this Section, a #building# at any height shall be set back at least to the depth of the #setback line# indicated on the applicable table.

For heights between those shown on the table, the depth of the #setback line# shall be interpolated.

Required depths of #setback lines# shall be rounded off to the next highest half foot.

The setback requirements apply only to portions of #buildings# above the maximum height permitted at the #street line#, so that required setbacks on the narrower #street# frontage of a #corner lot# shall apply only to heights above the maximum front wall heights permitted by the #corner lot# provisions of paragraph (b) of Section 81-262 (Maximum height of front wall at the street line).

(d) #Middle one-third rule#

A #building# may penetrate beyond the #setback line# at any height if the penetration is confined to the middle third of the #front lot line# length and complies in all respects with the #middle one-third rule# as defined in Section 81-261 (Definitions).

## 81-264 - Encroachments and compensating recesses

LAST AMENDED
2/2/2011

In addition to complying with the setback requirements of Section 81-263 (Standard setback requirements), a #building# shall not at any height encroach beyond a #half-setback line# or a #ten-foot setback line#, except as provided below. For each #street frontage zone# and for all #street frontage zones#, taken together on a single #encroachment grid#, a #building# shall not, at any level, have an aggregate area of #encroachment# beyond the #setback line#, other than in any #free zones#, greater than the aggregate area of #compensating recess# at such level.

Except as provided below, an area of #compensating recess# in one #street frontage zone# shall not be used to compensate for #encroachment# in another #street frontage zone#. However, a #building# with a #street frontage zone# which lies along a north-south #wide street# and does not meet the above requirements because of excessive #encroachment# will be in compliance with the #street frontage zone# requirements of this Section if compensation is provided for such excessive #encroachment# by an overlapping #street frontage zone#.

The requirement that the aggregate area of #compensating recess# at least equal the aggregate area of #encroachment#, as set forth in this Section, shall also apply to any #building# which encroaches beyond a #half-setback line# and which is therefore subject to the provisions of Section 81-265 (Encroachment limitations by length and height rules). (See illustration of Encroachments and Compensating Recesses)

(a) Rules for measuring #encroachments# and recesses

Areas of #encroachment# and #compensating recess# shall be measured in plan on one or more #encroachment grids# showing for the #zoning lot#, at a given height level, the #street lines#, the #setback lines#, the #half-setback lines#, the #ten-foot setback lines#, #Zone A#, #Zone B# and #Zone C# and the #street frontage zones#.

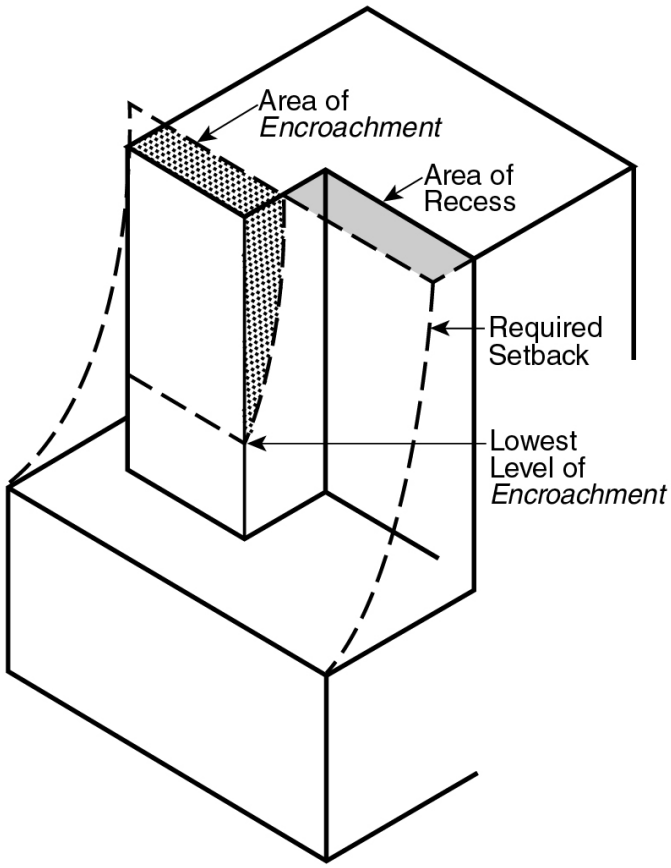


ENCROACHMENTS AND COMPENSATING RECESSES

(81-264a)

The scale of the #encroachment grid# shall be not more than 20 feet to the inch. All #buildings#, existing and proposed, shall be located accurately on the grid in plan at the height level selected to demonstrate compliance. For each #street frontage zone#, the areas of the #building's# #encroachment# in #Zone B# and #Zone C# and the #compensating recess# areas not covered by any #building# in #Zone A# shall be measured on the #encroachment grid#.

(b) Limits of #encroachment#

Except as provided in paragraph (d) of this Section for existing #buildings# below specified heights, #encroachment# is limited as follows:

(1) For each #street frontage zone#, at every height above the maximum front wall height at the #street line#, the area within #Zone A# that is not covered by a #building# and qualifies as #compensating recess# area shall, in the aggregate, equal or exceed the aggregate area in #Zone B# and #Zone C# that is encroached upon by a #building# at such height.

(2) No part of a #building# shall encroach into #Zone C# unless it complies with the provisions of Section 81-265.

(3) On #corner lots#, the projection of a #building# beyond the #setback line# or #half-setback line# on the narrower #street# shall not count as an #encroachment# except at heights above the maximum height permitted at the #street line# by the #corner lot# provisions in paragraph (b) of Section 81-262 (Maximum height of front wall at the street line).

(c) Limitations on #compensating recess#

#Compensating recess# areas are subject to the following limitations:

(1) Any required #compensating recess# area shall extend without diminution of dimensions downward at least to the lowest level at which any #encroachment# into #Zone B# or #Zone C# occurs and upward to the sky. (See illustration of Extension Downward of Compensating Recess Area)

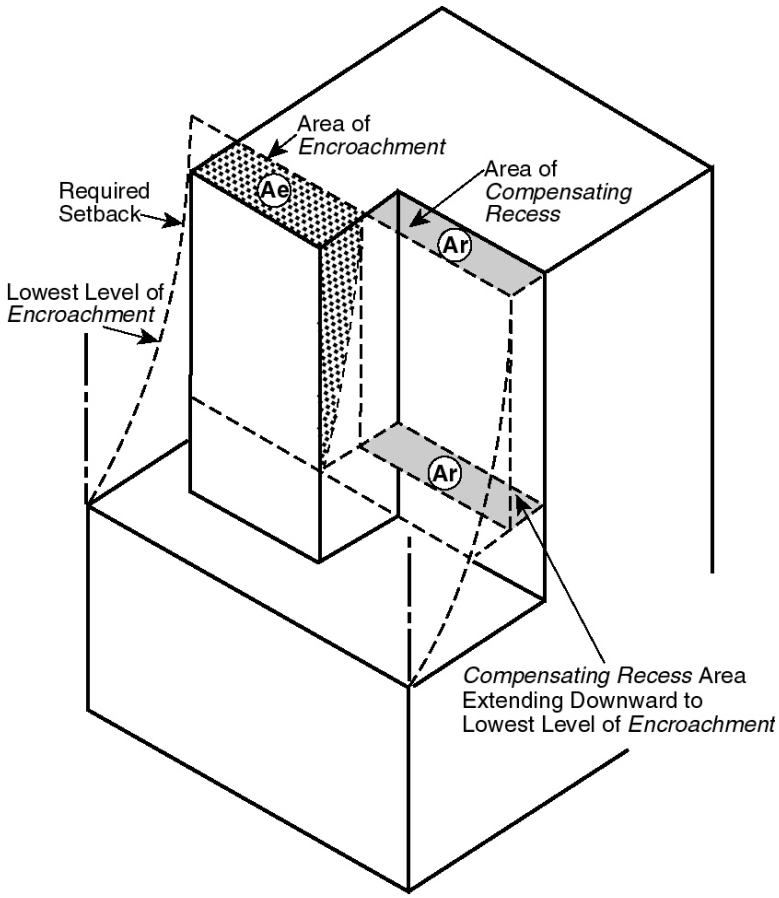


EXTENSION DOWNWARD OF COMPENSATING RECESS AREA

(81-264c1)

(2) #Compensating recess# area shall be visible when viewed from at least one adjacent #street# along a line that intersects the #front lot line# of the #zoning lot# at right angles. (See illustration of Visibility of Compensating Recess Area)

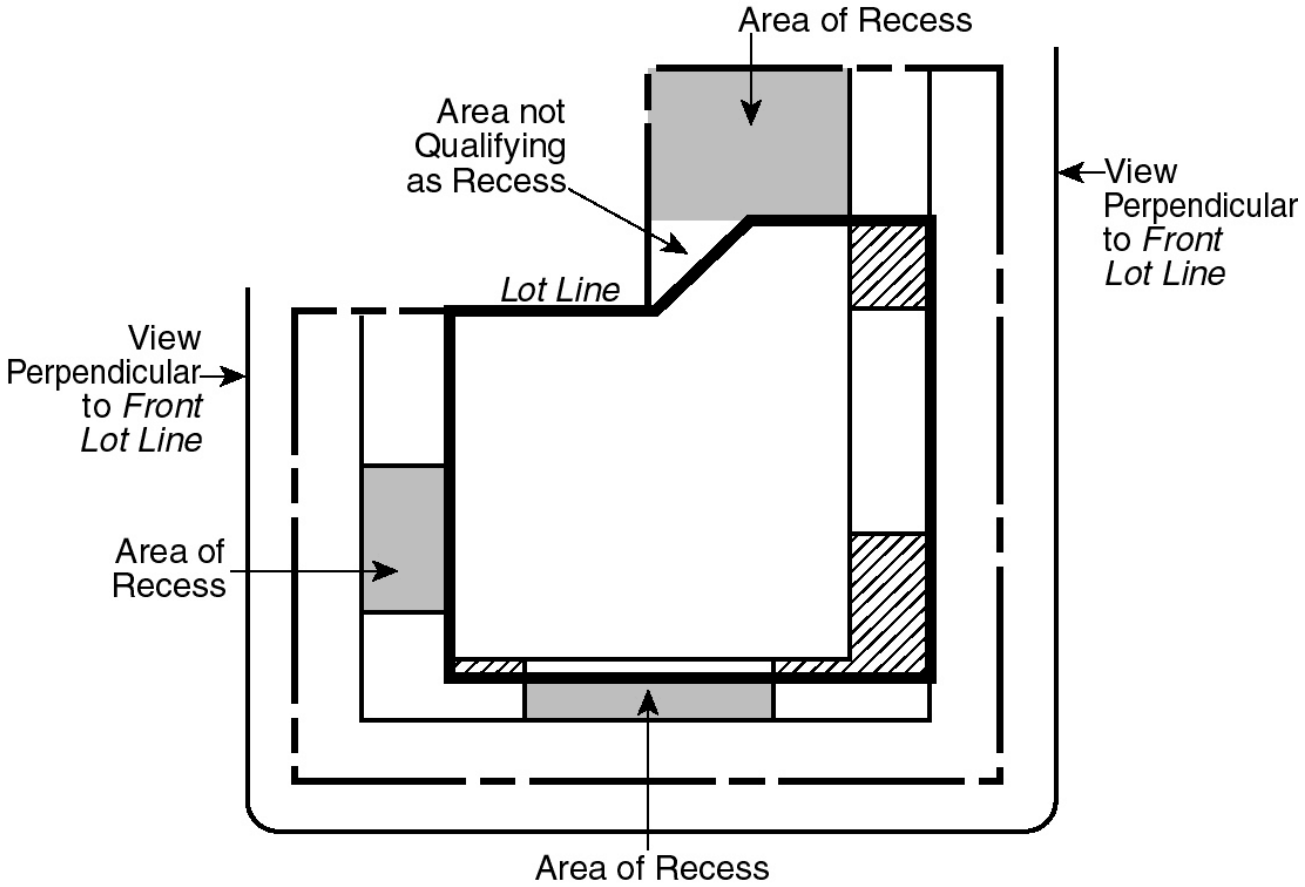


VISIBILITY OF COMPENSATING RECESS AREA

(81-264c2)

(3) The minimum length of a #compensating recess#, measured parallel to the #street line#, and behind the #setback line#, is 30 feet, except for any uncovered portion of an area that qualifies as #Zone A# under the #middle one-third rule# or an uncovered area located behind two intersecting #setback lines#. An uncovered area between the #setback line# and #half-setback line# that qualifies as #Zone A# under the #middle one-third rule# is not subject to the minimum length requirement. (See illustration of Minimum Length of Compensating Recess)

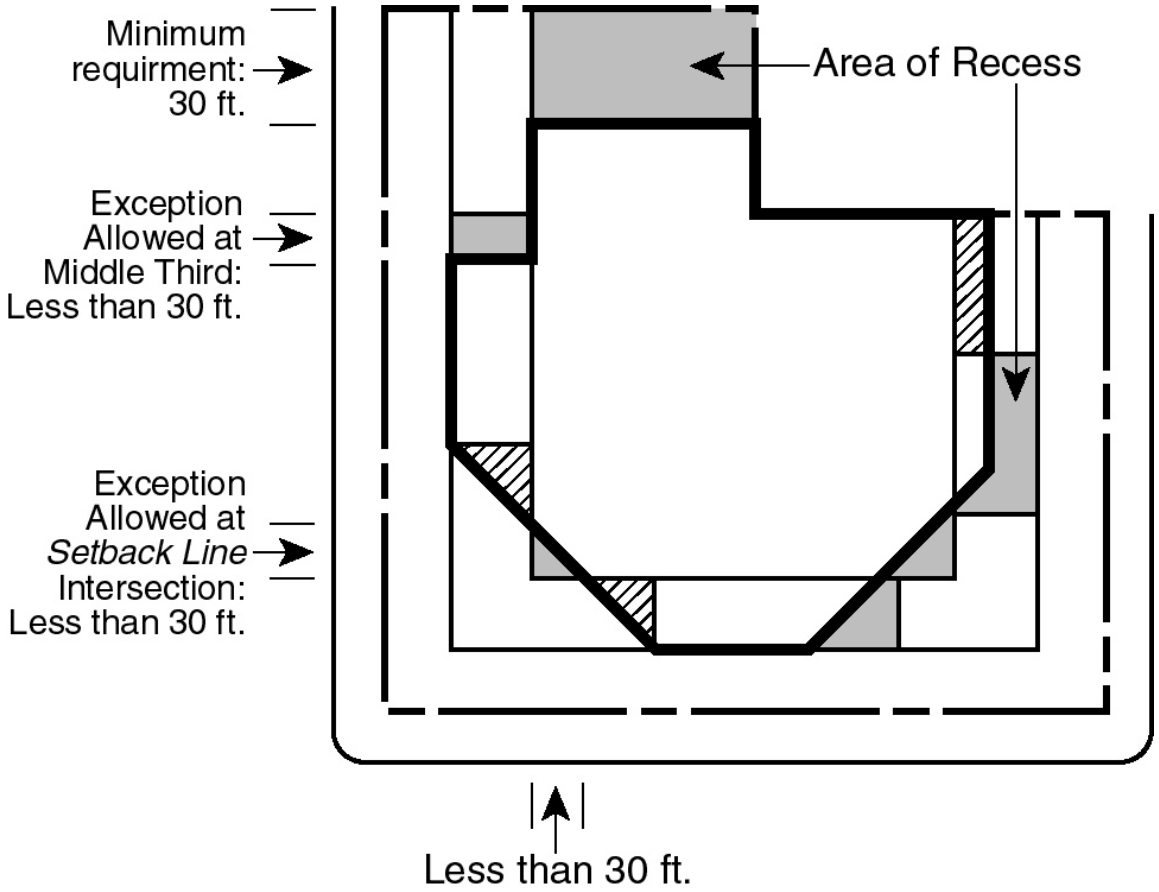


MINIMUM LENGTH OF COMPENSATING RECESS

(81-264c3)

(4) #Compensating recess# area shall be within 100 feet of a #front lot line#.

(d) Existing #buildings# on the #zoning lot#

Where a #zoning lot# contains an existing #building# which exceeds a height limit, an #enlargement# or #development# on such #zoning lot# shall comply with the following provisions:

(1) For each #street frontage zone#, if the existing #building# is not more than 120 feet in height at any point and encroaches into #Zone B# or #Zone C# or beyond the #ten-foot setback line# along the frontage of a #street# 60 feet wide, or if the existing #building# is not more than 150 feet in height at any point and encroaches into #Zone B# or #Zone C# or beyond the #ten-foot setback line# along the frontage of a #street# 75 or more feet in width, the new #building# or #enlargement# is not required to compensate for such #encroachment# by the provision of #compensating recess# areas. #Encroachment# by such an existing #building# into #Zone C# or beyond the #ten-foot setback line# will not subject the new #building# or #enlargement# to the provisions of Section 81-265 unless the new #building# or #enlargement# also encroaches into #Zone C#.

(2) For each #street frontage zone#, space above such existing #building# and within #Zone A# on the #encroachment grid# may count as #compensating recess# area for the new #building# or #enlargement# provided that such space is at or below the lowest level of any compensable #encroachment# by the new #building# or #enlargement#, that it is located within the same #street frontage zone# as that compensable #encroachment#, and that it qualifies in all respects under the provisions of paragraph (c) of this Section (Limitations on #compensating recess#).

(3) For each #street frontage zone#, if an existing #building# more than 120 feet in height at any point encroaches into #Zone B# or #Zone C# or beyond the #ten-foot setback line# along the frontage of a #street# 60 feet wide, or if an existing #building# more than 150 feet in height at any point encroaches into #Zone B# or #Zone C# or beyond the #ten-foot

setback line# along the frontage of a #street# 75 or more feet in width, the #encroachment# of such #building# into #Zone B# or #Zone C# or beyond the #ten-foot setback line# at any height shall be subject to the requirements for #compensating recess# areas set forth in paragraph (b)(1) of this Section, as if it were a new #building#. Where such an existing #building# encroaches into #Zone C# or beyond the #ten-foot setback line#, the provisions of paragraph (f)(2) in Section 81-265 shall apply in addition to the provisions of this Section. (See illustration of Existing Buildings on the Zoning Lot)

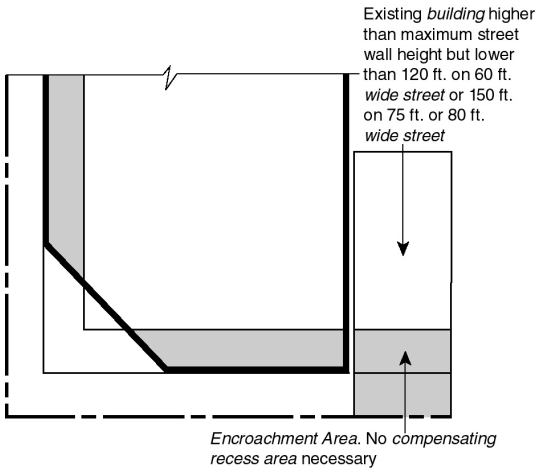


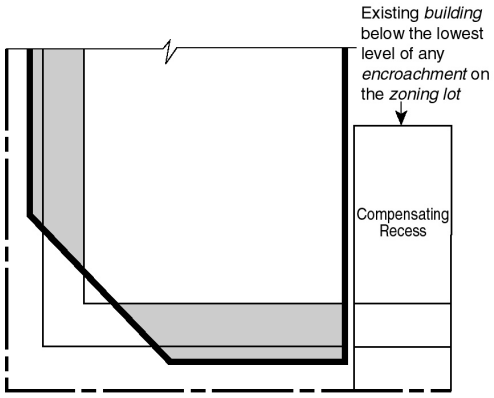


EXISTING BUILDINGS ON THE ZONING LOT

(81-264d3)

## 81-265 - Encroachment limitations by length and height rules

LAST AMENDED
4/28/1988

Above the maximum height of a front wall at the #street line# as set forth in Section 81-262, a #building# may only encroach beyond the #half-setback line# if it complies with the provisions of this Section and if the area of #compensating recess# equals or exceeds the area of #encroachment# in #Zone B# and #Zone C# in accordance with the provisions of Section 81-264 (Encroachments and compensating recesses).

(a) Special limitations

No #encroachment# beyond the #half-setback line# shall be within 30 feet of a #side lot line#. (See illustration of Prohibited and Allowed Encroachment Beyond Half-Setback Line)

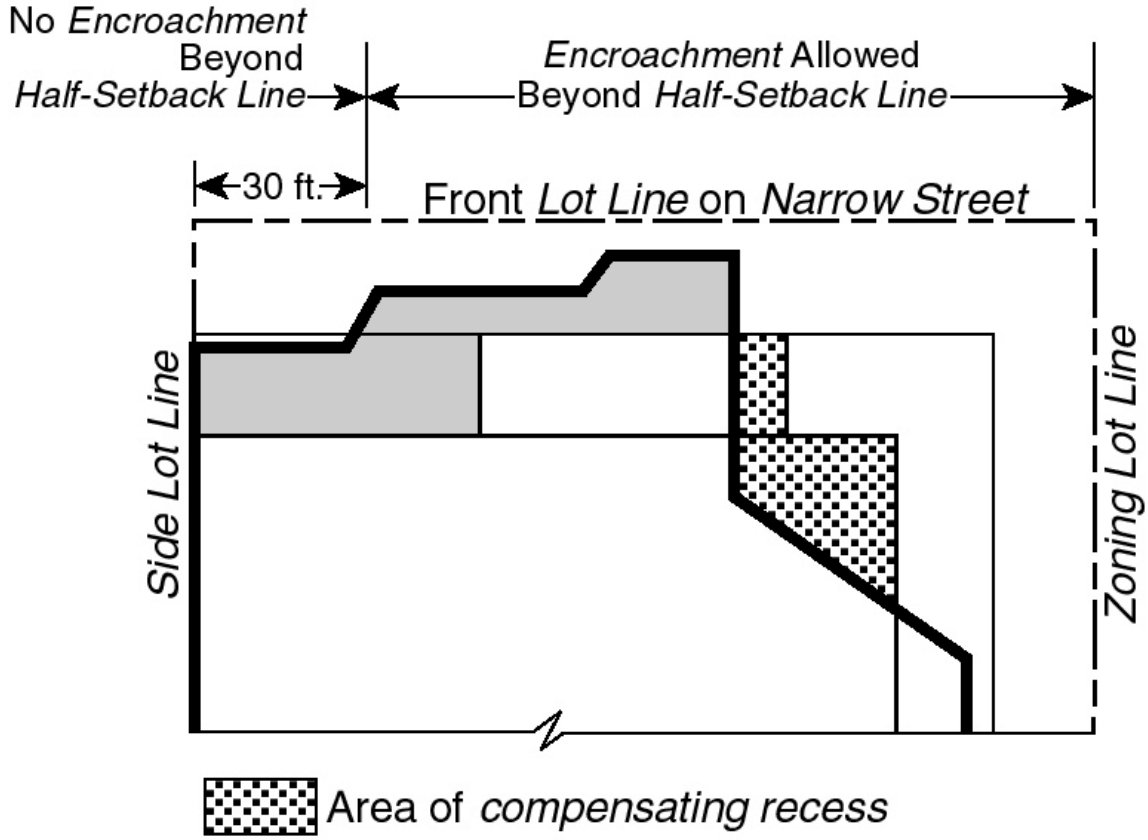


PROHIBITED AND ALLOWED ENCROACHMENT BEYOND

HALF-SETBACK LINE

(81-265a)

(b) General provisions

The length, depth, height and area of #encroachments# along any #street# frontage all contribute to a #building's# impact on daylight access. In order to determine whether the depth of a #building's# #encroachment# into #Zone C# is justified, the length of the #encroachment#, measured parallel to the #street line#, and its height above #curb level# must also be evaluated. The extent of #encroachment# also must be considered in relation to the extent of the area of #compensating recess# in the same #street frontage zone#. The purpose of the length and height rule is to ensure, in the case of #encroachments# beyond the #half-setback line#, that the closer a #building# comes to the #street line#, the less will be the length of its #encroachment#, its height or both. (See illustration of Elements Analyzed)

The elements comprising this analysis are represented by symbols and are as follows:

(1)

| | | |
|---|---|---|
| De | = | depth of #encroachment# |
| D | | depth of #setback line# |

De (depth of #encroachment#) means depth of #encroachment# beyond the #setback line#. Depth of #encroachment# is measured perpendicularly to the #setback line#.

D (depth of #setback line#) means depth of #setback line# from the #street line# or depth of #ten-foot setback line# from the #street line#, whichever depth is greater.

(2)

| | | |
|---|---|---|
| Le | = | length of #encroachment# |
| L | | length of #front lot line# |

Le (length of #encroachment#) means total length of #encroachment# outside the #half-setback line#. Length of #encroachment# is measured as the total length of the #encroachments'# projections on the #street line#.

L (length of #front lot line#) means the length of the #front lot line# along the particular #street#. However, the length of the #front lot line# for the purposes of this Section shall not exceed 300 feet, irrespective of the actual #lot line# length.

(3)

| | | |
|---|---|---|
| Le | = | length of #encroachment# |
| Lr | | length of recess |

Le (length of #encroachment#) as defined in paragraph (b)(2) of this Section.

Lr (length of recess) means total length of #setback line# not encroached upon by a #building#.

(4)

| | | |
|---|---|---|
| H | = | height of #encroachment# |
| L | | length of #front lot line# |

H (height of #encroachment#) means the height of the #encroachment# above #curb level#.

L (length of #front lot line#) as defined in paragraph (2) of this Section.

(5)

| | | |
|---|---|---|
| Ar | = | area of #compensating recess# |
| Ae | | area of #encroachment# |

Ar (area of #compensating recess#) means area of #compensating recess# in the particular #street frontage zone#. Area of #compensating recess# is calculated to a depth of 100 feet from the #street line#.

Ae (area of #encroachment#) means area of #encroachment# beyond the #setback line#. Area of #encroachment# is calculated to a depth of 100 feet from the #street line#.

Values for the elements in paragraphs (b)(1) through (b)(5) shall be found for each #street frontage zone# on which there is any #encroachment# beyond the #half-setback line#.

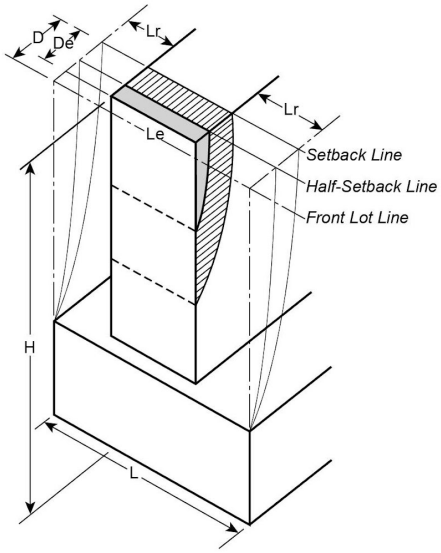


L – Length of *front lot line* along the particular *street*

Le – Length of *encroachment* outside *half-setback line* or *ten-foot setback line*

Lr – Total length of *setback line* not encroached by *building*

De– Depth of *encroachment*

D – Depth of *setback line*

H – Height of *encroachment* above *curb level*

ELEMENTS ANALYZED

(81-265b)

The elements, weighted according to the effects on daylight access, are represented in the formulas and charts that control the depth, length and height of #encroachments#, as set forth in paragraph (c) of this Section.

#Encroachments# of proposed #buildings# or #enlargements# beyond the #half-setback line# are permitted only if in compliance at every point with the formulas in paragraph (c) of this Section. Aside from this general requirement, specified points at which the length, depth, height and area rules shall be applied are presented in paragraphs (d) and (e) of this Section.

(c) #Encroachment# limitations by Formulas 1 and 2

Where applicants elect to have their #buildings# regulated by the formulas, #buildings# shall comply with both Formula 1 and Formula 2 as set forth in this paragraph. Elements of the formulas and the symbols by which they are represented are as set forth in paragraph (b) of this Section.

Formula 1:

| | | | | | | | | | | | |
|---|---|---|---|---|---|---|---|---|---|---|---|
| | Maximum | H | = | 5.5—4 | ( | De | ) | —2.5 | ( | Le | ) |
| | | L | | | | D | | | | L | |

Formula 2:

| | | | | |
|---|---|---|---|---|
| Minimum | | Lr | = | L |
| | | | | 3.5 |

The maximum height of #encroachment# (H) allowed by Formula 1 may be modified for certain conditions, as follows:

(1) For short frontages

For any frontage less than 200 feet in length, the maximum

$$\frac{H}{L}$$

found by applying Formula 1 may be increased by the following multiplier:

$$2 - \frac{L}{200}$$

(2) For large areas of #compensating recess#

To the extent that the aggregate area of #compensating recess# (Ar) exceeds the aggregate area of #encroachment# (Ae), the maximum

$$\left(\frac{H}{L}\right)$$

found by applying Formula 1 may be increased by the following multiplier:

$$1 + \frac{.067\ Ar}{Ae}$$

For the purposes of this modification, the measurement of the area of #compensating recess# (Ar) and the area of #encroachment# (Ae) in each particular #street frontage zone# shall be made on the #encroachment grid# at the height level for which #encroachments# beyond the #half-setback line# are checked. The #encroachment grid# shall include all #street frontage zones#. (Ar) shall include all areas of #compensating recess# in the particular #street frontage zone#, whether or not connected, and (Ae) shall include all #encroachments# in both #Zone B# and #Zone C# in the same #street frontage zone#, whether or not such #encroachments# are connected.

(d) Measurement of #encroachments#

The points at which the formulas are applied will depend upon the shape and dimensions of the #encroachments# beyond the #half-setback line# and shall be in accordance with the provisions of this paragraph and paragraph (e) of this Section.

Where the #encroachments# along a single #street# frontage are not connected outside the #half-setback line#, each #encroachment# shall be measured separately in accordance with the provisions of paragraph (e). However, at any given height, where such non-contiguous #encroachments# occur, the #encroachments# shall be examined together, and the length of #encroachment# (Le) shall be the total of the (Le) for the individual #encroachments#. (See illustration of Non-contiguous #Encroachments#)

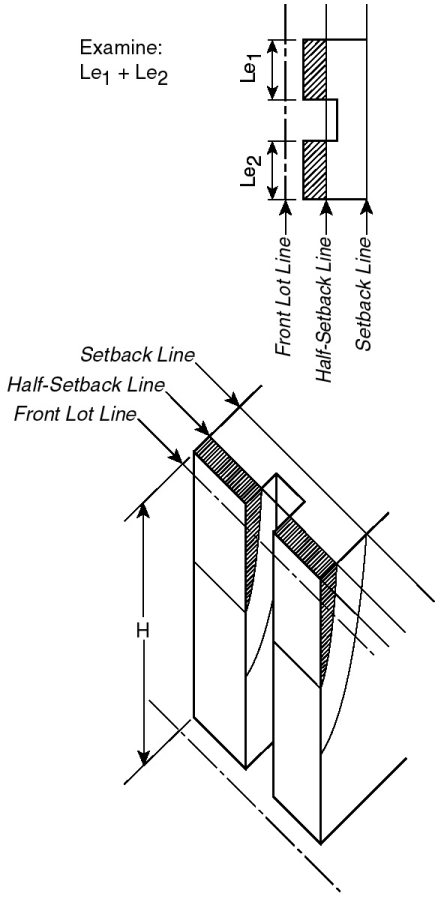


NON-CONTIGUOUS ENCROACHMENTS

(81-265d)

(e) Heights and depths at which formulas are applied

Heights and depths at which the formulas shall be applied are set forth in this paragraph. In addition to meeting the requirements of paragraphs (e)(1) and (e)(2) of this Section, the applicant shall demonstrate that there is no height at which the proposed #building# or #enlargement# fails to comply with the formulas in paragraph (c) of this Section.

(1) Standard requirement where length of #encroachment# is uniform

Where the length of the #encroachment# (Le) is uniform for the entire height of the #encroachment# (H) and the entire depth (De) at every height, the length, depth and height rules expressed in the formulas shall be applied only at the height where (De/D) is greatest and at the outermost edge of the #encroachment#. (See illustration of Uniform Length of #Encroachment#)

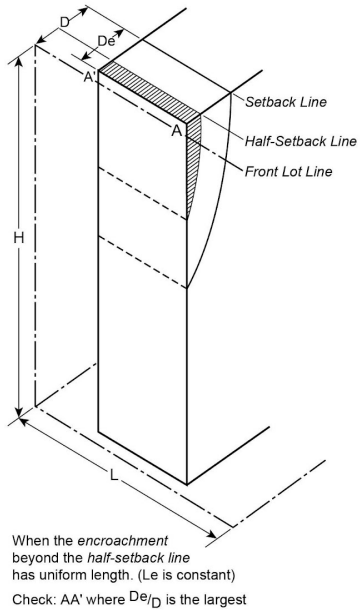


UNIFORM LENGTH OF ENCROACHMENT

(81-265e1)

(2) Standard requirement where length of #encroachment# is not uniform

Where the length of the #encroachment# (Le) is not uniform, the rules shall be applied at the height level where (De/D) is greatest and also at the height level where the length of #encroachment# (Le) is greatest. If the greatest length of #encroachment# is uniform for part of the #building's# height, the rules shall be applied at the highest level at which such greatest length of #encroachment# occurs. (See illustrations Where Length of #Encroachment# Is Not Uniform).

If for a particular height level, the length of the #encroachment# (Le) varies with the depth of the #encroachment# (De), the largest (Le) of this #encroachment# shall be used together with the largest (De) in applying the rules as if the #encroachment# were of uniform length as provided in paragraph (e)(1) of this Section.

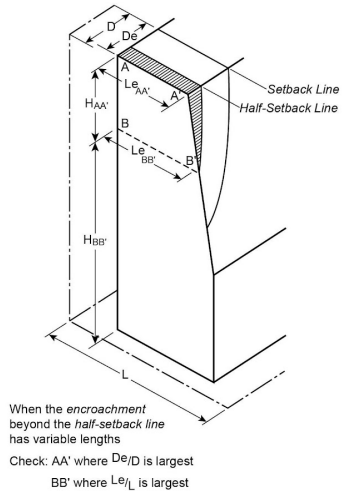


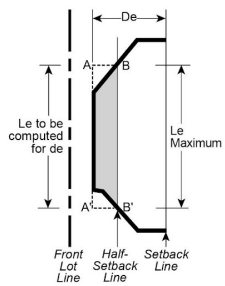


WHERE LENGTH OF ENCROACHMENT IS NOT UNIFORM

(81-265e2)

(f) #Encroachments# by existing #buildings#

When a #zoning lot# contains an existing #building# which encroaches beyond a #half-setback line# or a #ten-foot setback line#, an #enlargement# or #development# on such #zoning lot# shall comply with the following provisions:

(1) Existing #buildings# below specified heights

(i) Except as provided in paragraph (f)(1)(ii) of this Section, an existing #building# not more than 120 feet in height shall not be considered in applying the length and height rules even though a portion of such #building# encroaches beyond the #half-setback line# or #ten-foot setback line# along a 60 foot wide #street# and an existing #building# not more than 150 feet in height shall not be considered in applying the length and height rules even though a portion of such #building# encroaches beyond the #half-setback line# or #ten-foot setback line# along a #street# 75 or more feet in width.

(ii) However, the area occupied by the existing #building# shall be included in the calculation of (Ar/Ae) for the modification of Formula 1 allowed in the case of large areas of #compensating recess#, as set forth in paragraph (c)(2) of this Section.

(2) Existing #buildings# above specified heights

Where an existing #building# more than 120 feet in height encroaches beyond the #half-setback line# or #ten-foot setback line# along a 60-foot wide #street# or where an existing #building# more than 150 feet in height encroaches beyond the #half-setback line# or #ten-foot setback line# along a #street# 75 or more feet in width, the following provisions, in addition to those of paragraph (d)(3) of Section 81-264 (Encroachments and compensating recesses), shall apply:

(i) no new construction on the #zoning lot# shall encroach beyond the #half-setback line# along any #street#, and

(ii) the length and height rules of this Section shall not apply.

## 81-266 - Special permit for height and setback modifications

LAST AMENDED
4/28/1988

In C5-3, C6-6 or C6-7 Districts, where a special permit application is made pursuant to Section 74-71 (Landmark Preservation) for modification of #bulk# regulations on a #zoning lot# containing a landmark, or where a special permit application is made pursuant to Section 74-79 for transfer of development rights from a landmark site and the #floor area# represented by such transferred development rights exceeds 20 percent of the basic maximum #floor area# permitted on the #zoning lot# receiving the development rights, such application may include a request for modification of the height and setback regulations set forth in Sections 81-261 to 81-265, inclusive, relating to Height and Setback Regulations - Daylight Compensation. The City Planning Commission may authorize such height and setback modifications subject to the following conditions:

(a) the applicant shall demonstrate to the satisfaction of the Commission that a feasible design for the proposed #development# or #enlargement# which accommodates the permitted #floor area# is not possible under the provisions of Sections 81-261 to 81-265, inclusive, and shall further indicate for the proposed design where and to what extent deficiencies of #compensating recess# are necessary or compliance with the length and height rules is not possible. Scale drawings shall be used in presenting the analyses required herein; and

(b) the Commission shall make the following findings in addition to any required under the applicable provisions of Section 74-71 or Section 74-79:

(1) that the requested departure from the height and setback regulations is the minimum amount necessary to achieve a feasible #building# design;

(2) that the disadvantages to the surrounding area resulting from reduced light and air access will be more than offset by the advantages of the landmark's preservation to the local community and the City as a whole; and

(3) that where the landmark is located on the #zoning lot# proposed for #development# or #enlargement# or on a lot contiguous thereto or directly across a #street# therefrom, the modification of height and setback regulations will adequately protect the setting for the landmark.

## 81-27 - Alternate Height and Setback Regulations - Daylight Evaluation

LAST AMENDED
8/9/2017

## 81-271 - Definitions

LAST AMENDED
8/9/2017

Center line of the street (bounding a #zoning lot#)

A line equidistant from and parallel or nearly parallel to the #street lines# on both sides of the #street#. However, for the purposes of daylight evaluation:

(a) on a #street# 75 feet in width, the #center line of the street# shall be considered to be a line 40 feet from, and parallel to, the #front lot line# of the #zoning lot#; and

(b) on a #street# more than 100 feet in width, the #center line of the street# shall be considered to be a line 50 feet from, and parallel to, the #front lot line# of the #zoning lot#.

Daylight Evaluation Chart (DEC)

A graphic tool which permits objective measurements of portions of sky blocked by a #building# when it is viewed from a #vantage point#. There are three #daylight evaluation charts# for use with #street# widths of 60 feet, 75 to 80 feet and 100 feet and over, respectively. All #buildings# are drawn on the appropriate #daylight evaluation chart# to evaluate their compliance with the regulations of Section 81-27 (Alternate Height and Setback Regulations—Daylight Evaluation). These three #daylight evaluation charts# are in Appendix B of this Chapter. A fourth chart in Appendix B is available for use with #qualifying sites# in the East Midtown Subdistrict, as defined in Section 81-613, with frontage along Park Avenue.

Far lot line

A #lot line# intersecting the #street line# of the #vantage street# such that, when viewed from the #vantage point#, the #zoning lot# does not contain any #lot area# that is on the far side of and immediately adjoining the #lot line# at its intersection with the #street line#. (See illustration of #Far Lot Line# and #Vantage Point#)

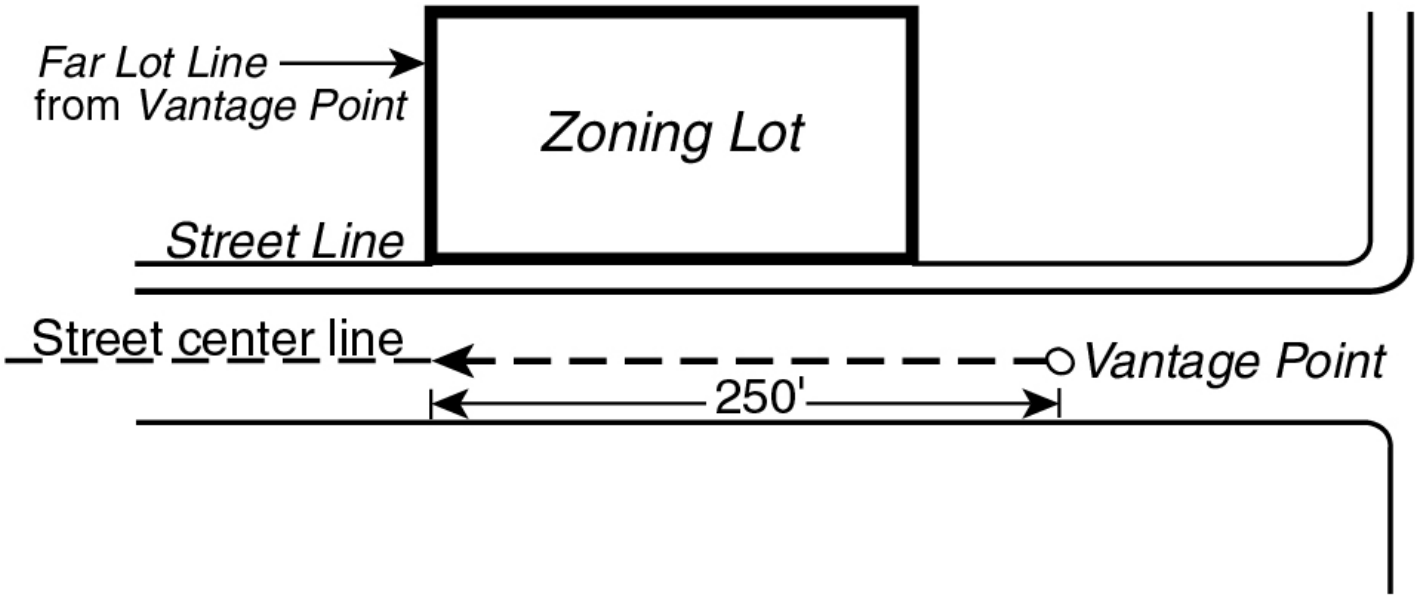


FAR LOT LINE AND VANTAGE POINT

(81-271.1)

Near lot line

A #lot line#, other than the #far lot line#, which intersects the #street line# of the #vantage street# and which defines the extent of the #zoning lot's# continuous frontage along the #vantage street# from the #far lot line#.

Profile curve

A curved line on the #daylight evaluation chart# rising from the intersection of the curved line representing an elevation angle of 72 degrees with the vertical line at the #far lot line#. The #profile curve# is used to evaluate a #building's# obstruction of the sky as seen in profile from the #vantage point#.

Profile encroachment

The space on the #daylight evaluation chart# which, when viewed from the #vantage point#, is on the far side of the #profile curve# and which is blocked by the projection of the #building# on the #daylight evaluation chart#. (See illustration of #Profile Encroachment#)

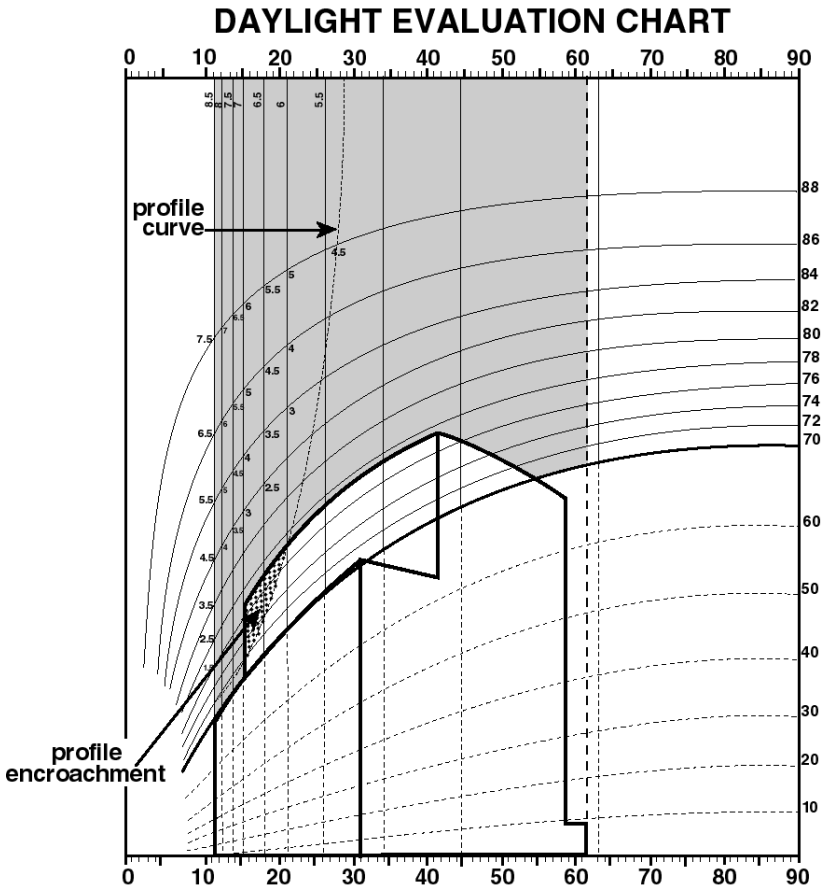


PROFILE ENCROACHMENT

(81-271.2)

Vantage point

A point on the #center line of the street# bounding the #zoning lot# and located 250 feet from the intersection of the extension of the #zoning lot's# #far lot line# with the #center line of the street#. (See illustration of #Far Lot Line# and #Vantage Point#)

Vantage street

A #street# bounding the #zoning lot# and on the center line of which a #vantage point# is located.

## 81-272 - Features of the Daylight Evaluation Chart

LAST AMENDED
2/2/2011

The #daylight evaluation chart (DEC)# is a graphic representation of a pedestrian's field of view as he or she looks down a #street# and sweeps his or her view 90 degrees to the left or to the right.

Under special conditions, this view can be extended to 180 degrees horizontally as specified in Section 81-275 (Special conditions).

This pedestrian view is based on a #vantage point# located 250 feet from the intersection of the #zoning lot's# #far lot line# with the #center line of the street#.

There are three #daylight evaluation charts# for use with different Midtown #street# widths. They include a chart for 60-foot wide #streets# (for most east-west crosstown #streets#) as well as a chart for 75-foot or 80-foot wide #streets# and a chart for #streets# 100 feet or more in width (for avenues and major crosstown #streets#). All of these charts have the following features:

(a) Horizontal and vertical axes

The #daylight evaluation chart# has both a horizontal and vertical component, encompassing views sweeping both 90 degrees horizontally and 90 degrees vertically. (See illustration of Horizontal and Vertical Angles of View)

Under special conditions, this view can be extended to 180 degrees horizontally as specified in Section 81-275.

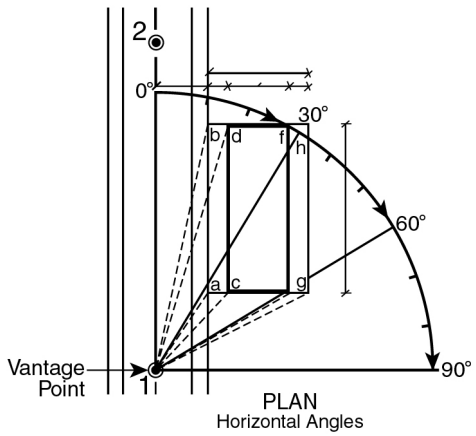


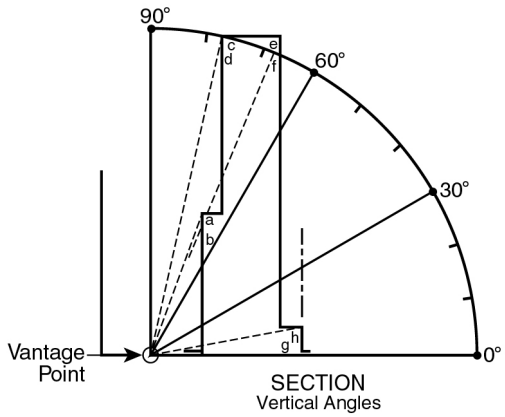


HORIZONTAL AND VERTICAL ANGLES OF VIEW

(81-272a.1)

The horizontal axis of the #daylight evaluation chart# is measured in degrees of arc from zero degrees to 90 degrees starting from the #vantage point# along the #center line of the vantage street# and sweeping toward the #building#.

The horizontal axis is intersected by vertical lines corresponding to lines of sight from the #vantage point# to points 25 feet apart on the #front lot line# along the #vantage street# measured from the intersection of the #far lot line# with the #street line# of the #vantage street#.

The vertical axis of the #daylight evaluation chart# is measured in degrees of arc from zero degrees to 90 degrees starting from the #center line of the vantage street# at #curb level# and sweeping upward.

The vertical axis is intersected by curved elevation lines representing elevation angles from the #center line of the street# at 10 degree intervals from zero degrees to 70 degrees and at two degree intervals from 70 degrees to 90 degrees. (See illustration of Horizontal and Vertical Axes)

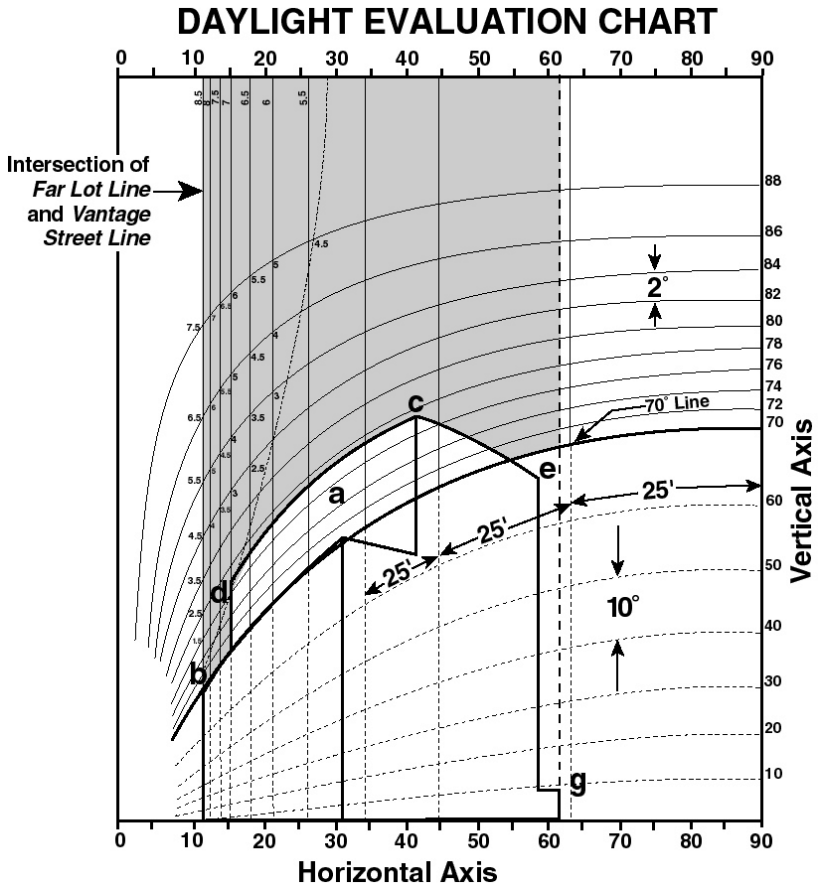


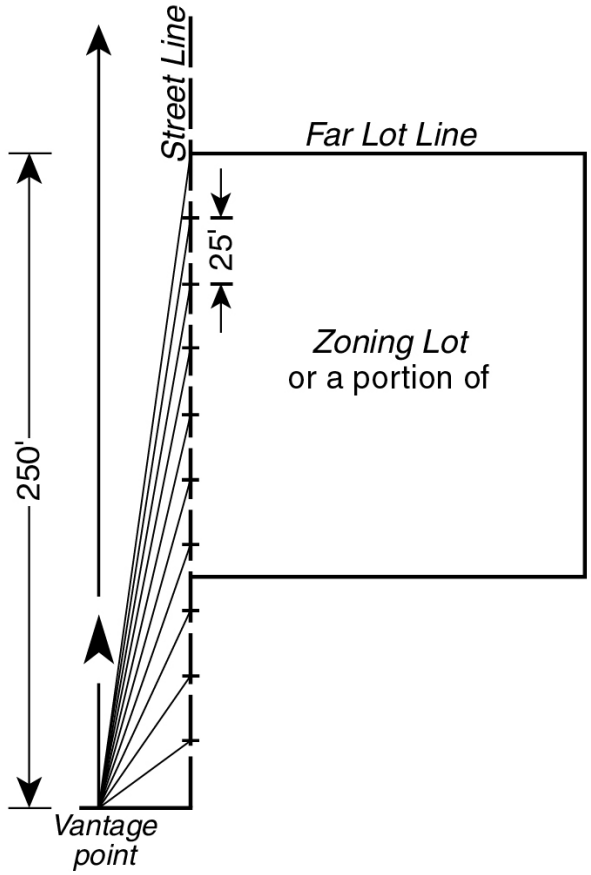

HORIZONTAL AND VERTICAL AXES

(81-272a.2)

(b) Daylight squares

The horizontal and vertical lines form a curvilinear grid dividing the #daylight evaluation chart# into areas called daylight squares. Above the 70 degree line, the grid is divided into 100 daylight squares starting from the vertical line rising from the intersection of the #far lot line# with the #street line# of the #vantage street# and ending at the vertical line representing 90 degrees along the horizontal axis. Each of these 100 squares represents 25 feet of lot frontage on the #vantage street# and two degrees of elevation angle from the #center line of the vantage street#.

Below 70 degrees, the grid is divided into 70 daylight squares starting from the vertical line rising from the intersection of the #far lot line# with the #street line# of the #vantage street# and ending at the vertical line rising at 90 degrees along the horizontal axis. Each of these 70 squares represents 25 feet of lot frontage on the #vantage street# and 10 degrees of elevation angle from the #center line of the street#. (See illustration of Daylight Squares)

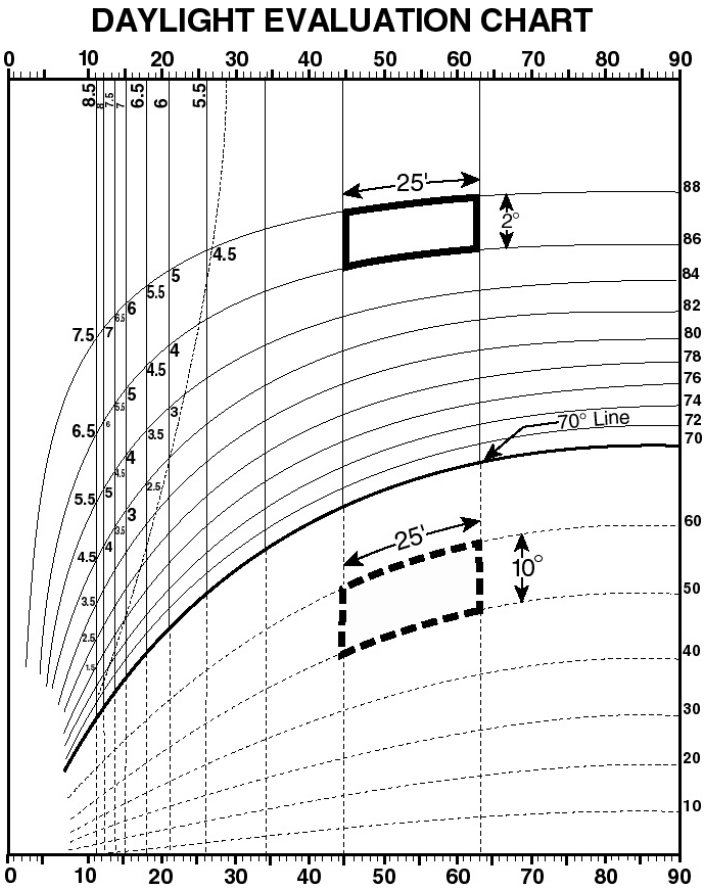


DAYLIGHT SQUARES

(81-272b)

(c) Daylight subsquares

For greater plotting and scoring precision, the horizontal axis of the grid is further subdivided by vertical lines at points five feet apart on the #front lot line# as seen from the #vantage point#. The vertical axis is further subdivided by curved lines representing lines of equal elevation at one degree intervals from 70 degrees to 90 degrees. Therefore, each daylight square is subdivided into 10 subsquares, each representing five feet of lot frontage on the #vantage street# and one degree of elevation angle from the #center line of the vantage street#. (See illustration of Daylight Squares and Subsquares Above 70 Degrees)

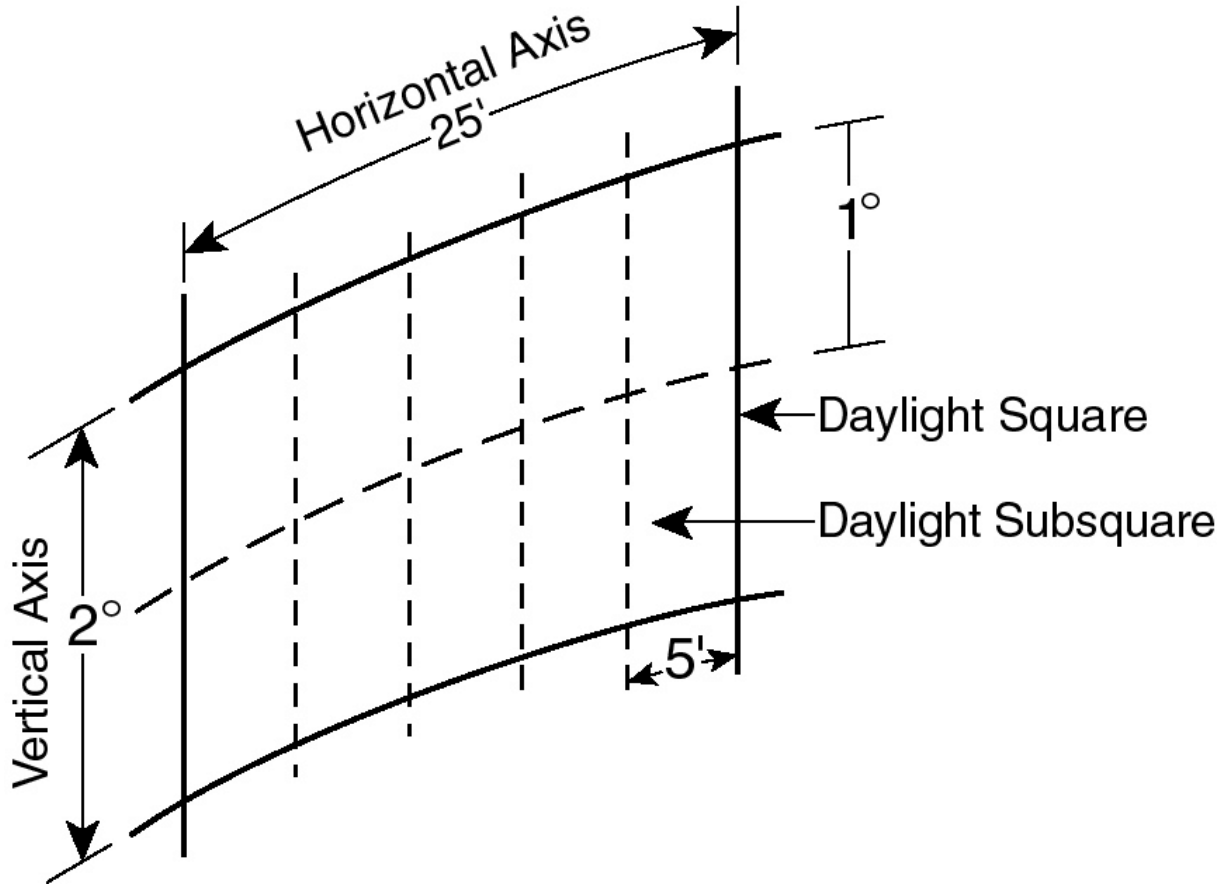


DAYLIGHT SQUARES AND SUBSQUARES ABOVE 70 DEGREES

(81-272c)

(d) The seventy degree line

Research shows that, as an average, 70 degrees is the elevation angle at which #buildings# in the #Special Midtown District# are set back from the #street line#. Most of the daylight below 70 degrees is blocked by such #buildings#. Slabs, towers or other setback portions of #buildings# rise to block an average of 25 percent of the available daylight squares above 70 degrees.

In #building# evaluation, the #DEC# measures the blocked sky above 70 degrees. Below 70 degrees, #buildings# are given credit for unblocked daylight.

(e) The #profile curve#

The grid is traversed by the #profile curve#, which rises from the intersection of the curved line representing an elevation angle of 72 degrees with the vertical line at the #far lot line#. The #profile curve# is derived from the predominant built character of developed Midtown #streets# as seen in profile. #Encroachment# across the #profile curve# is penalized to discourage canyon-like Midtown #streets# and to protect neighboring #buildings#.

## 81-273 - Rules for plotting buildings on the daylight evaluation chart

LAST AMENDED
2/2/2011

Evaluation of a #development# or #enlargement# requires drawing the new #buildings#, remaining #buildings# and open areas on the #zoning lot# on the appropriate #daylight evaluation chart (DEC)#, as viewed from each required #vantage point# and then scoring the #zoning lot#. The rules for plotting #buildings# on the #DEC# are set forth in the following paragraphs of this Section and illustrated by an example of a #building# which fronts on a 100-foot wide #street# and occupies a site 170 feet long by 100 feet deep.

(a) Draw the #building#

Draw the #building# in plan showing all #street# frontages of the #zoning lot#. Draw the #building# in section perpendicular to each #street# on which the #zoning lot# fronts. On both plan and section drawings label all corners of the #building#. In the example they are labeled corners (a) through (h). (See illustrations of Example: Building Drawings)

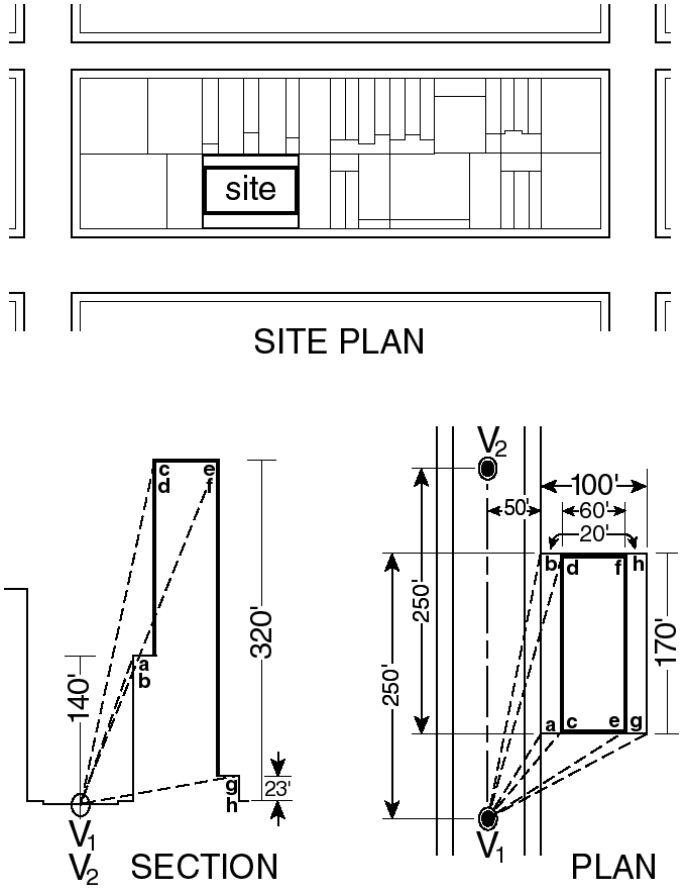


EXAMPLE: BUILDING DRAWINGS

(81-273a)

(b) Establish #vantage points#

Establish on the plan all the #vantage points# from which views must be taken. #Vantage points# shall be established on the #center line of the vantage street# 250 feet from the intersection of the #zoning lot's# #far lot line# and the #center line of the street#. For each #vantage street# there are at least two #vantage points#. In the example, they are V1 and V2. For each #vantage point# there shall be a separate #daylight evaluation chart#. The example will use #vantage point# one.

(c) Record plan and section dimensions

Record on a coordinate chart for each corner of the #building# the following dimensions:

(1) Dimensions in plan:

The distance (S) between the corner and the #center line of the street# as measured along a line that intersects the #center line of the street# at right angles. In the example, distance (S) of corner (b) + 50 feet.

The distance (D) measured along the #center line of the street# from the #vantage point# to the point where the #street# center line is intersected by the perpendicular line from the corner. In the example, distance (D) of corner (b) + 250 feet.

(2) Dimension in section:

The height (H) of the corner above #curb level#. In the example, height (H) of corner (b) + 140 feet.

(d) Calculate plan and section angles

Determine the plan and section angles for each corner of the #building# as viewed from the #vantage point#.

(1) A plan angle is an angle on the plan formed at the #vantage point# by the line of sight to a corner of the #building# and the #center line of the vantage street#. The plan angle is found by calculating the tangent. The tangent is the quotient found by dividing distance (S) by distance (D). The plan angle for the resulting tangent is found in a tangent table and is then entered on the coordinate chart in the column marked "plan angles."

(2) The section angle is an angle formed by a line representing the distance in section from a corner of the #building# to the #center line of the vantage street# and a line representing the distance in plan (S) between the corner and the #center line of the street#. The section angle is found by calculating its tangent. The tangent is the quotient obtained by dividing the height of the corner (H) by its horizontal distance (S) from the #center line of the street#.

The section angle for the resulting tangent is found in a tangent table and is then entered on the coordinate chart in the column market "section angles."

EXAMPLE OF COORDINATE CHARTS

Plan Angles

| Point | Distance (S) from #Street# Center Line (in feet) | Distance (D) from #Vantage Point# 1 (in feet) | Tangent (S÷D) of Angle | Angle |
|---|---|---|---|---|
| a | 50 | 80 | 50/80 = 0.63 | 32.0° |
| b | 50 | 250 | 50/250 = 0.20 | 11.3° |
| c | 70 | 80 | 70/80 = 0.87 | 41.2° |
| d | 70 | 250 | 70/250 = 0.28 | 15.6° |
| e | 130 | 80 | 130/80 = 1.63 | 58.4° |
| f | 130 | 250 | 130/250 = 0.52 | 27.5° |
| g | 150 | 80 | 150/80 = 1.88 | 61.9° |
| h | 150 | 250 | 150/250 = 0.60 | 31.0° |

Section Angles

| Point | Height (H) Above #Curb Level# (in feet) | Distance (S) from #Street# Center Line (in feet) | Tangent (H÷S) of Angle | Angle |
|---|---|---|---|---|
| a & b | 140 | 50 | 140/50 = 2.80 | 70.3° |
| c & d | 320 | 70 | 320/70 = 4.57 | 77.7° |
| e & f | 320 | 130 | 320/130 = 2.46 | 67.9° |
| g & h | 23 | 150 | 23/150 = 0.15 | 8.7° |

(e) Plot corner coordinates

Plot each corner of the #building# onto the #daylight evaluation chart# at the point where the coordinates for that corner intersect. The plan angle coordinates are found on the horizontal axis of the chart and the section angle coordinates are found on the vertical axis. The points plotted are then connected to represent the edges of the #building# as shown on the plan and section drawings. A connecting line parallel to the #street line# of the #vantage street# is drawn as a curve parallel to the closest elevation line. A connecting line perpendicular to the #street line# of the #vantage street# is drawn parallel to the closest dotted elevation line, which is perpendicular to the #street#. A connecting line which is neither parallel nor perpendicular to the #vantage street# is approximated on the chart by:

(1) establishing points along the line in plan at 10-foot intervals;

(2) finding the coordinates of the points and plotting them on the chart; and

(3) connecting the resulting points.

The connecting lines produce a curvilinear perspective drawing of the #building# as seen from the #vantage point# projected onto the #daylight evaluation chart#. Since in the example #vantage point# one is on a 100 foot wide #street#, corner coordinates are plotted on a #daylight evaluation chart# for 100 foot wide #streets#. In the example, corner (b) is at the intersection of plan angle 11.3° and section angle 70.3° (See illustration of Building as Drawn on the Daylight Evaluation Chart)

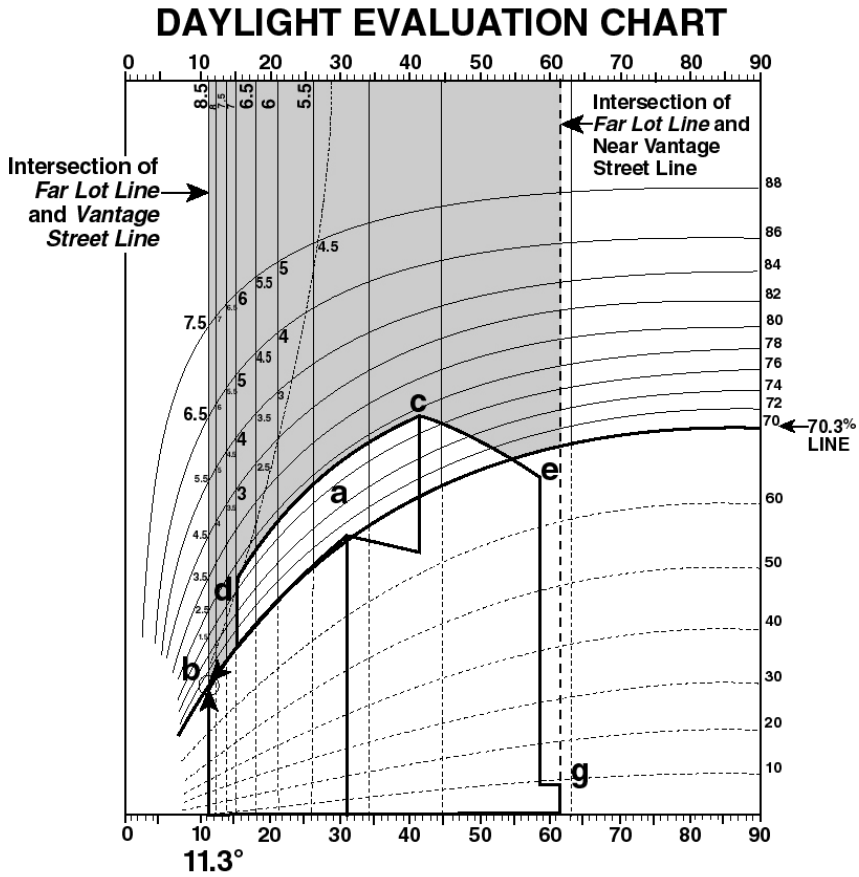


BUILDING AS DRAWN ON THE DAYLIGHT EVALUATION CHART

(81-273e)

(f) Determine daylight boundaries

Draw a vertical line on the chart rising from the intersection of the #near lot line# of the #zoning lot# with the center line of the #block# or with a line 100 feet distant from and parallel to the #front lot line# on the #vantage street#, whichever line is closer to the #vantage street#. This line and the #far lot line# represent the boundaries of the potential sky area that the #building# could block. (See illustration of Building as Drawn on the Daylight Evaluation Chart)

## 81-274 - Rules for determining the daylight evaluation score

LAST AMENDED
2/2/2011

A #zoning lot# is scored by determining the number and the value of the daylight squares the #building# blocks when viewed from the #vantage point#, compared to the total number of daylight squares available within the daylight boundaries as determined in paragraph (f) of Section 81-273 (Rules for plotting buildings on the daylight evaluation chart) and above an elevation angle of 70 degrees.

(a) Assign daylight values

The daylight squares on the #daylight evaluation chart# are each assigned a value.

(1) Except along #vantage streets# designated for #street wall# continuity (see Section 81-43), each unblocked daylight square below the curved line representing an elevation of 70 degrees has a positive value of 0.3 and each unblocked subsquare below the same curved line has a positive value of 0.03.

(2) Each blocked daylight square above the curved line representing an elevation of 70 degrees has a negative value of 1.0.

(3) Where a #building# blocks any portion of a subsquare the #building# is charged with blocking the entire subsquare in computing the daylight evaluation score. Each blocked subsquare has a negative value of 1.0/10 or 0.1.

(4) The daylight squares and subsquares which are on the far side of the #profile curve# are assigned additional weighted values set forth on the chart below. (See illustration of #Profile Encroachment# Incurring Profile Penalty)

| Degrees of Elevation | Distance from #Far Lot Line# | | | | | | | |
|---|---|---|---|---|---|---|---|---|
| | 1st 25ft | 2nd 25ft | 3rd 25ft | 4th 25ft | 5th 25ft | 6th 25ft | 7th 25ft | 8th 25ft |
| 88 to 90 | 8.5 | 8.0 | 7.5 | 7.0 | 6.5 | 6.0 | 5.5 | 5.0 |
| 86 to 88 | 7.5 | 7.0 | 6.5 | 6.0 | 5.5 | 5.0 | 4.5 | 4.0 |
| 84 to 86 | 6.5 | 6.0 | 5.5 | 5.0 | 4.5 | 4.0 | 3.5 | - |
| 82 to 84 | 5.5 | 5.0 | 4.5 | 4.0 | 3.5 | 3.0 | 2.5 | - |
| 80 to 82 | 4.5 | 4.0 | 3.5 | 3.0 | 2.5 | 2.0 | 1.5 | - |
| 78 to 80 | 3.5 | 3.0 | 2.5 | 2.0 | 1.5 | 1.0 | - | - |
| 76 to 78 | 2.5 | 2.0 | 1.5 | 1.0 | .5 | - | - | - |
| 74 to 76 | 1.5 | 1.0 | .5 | .5 | - | - | - | - |
| 72 to 74 | .5 | .5 | .5 | - | - | - | - | - |

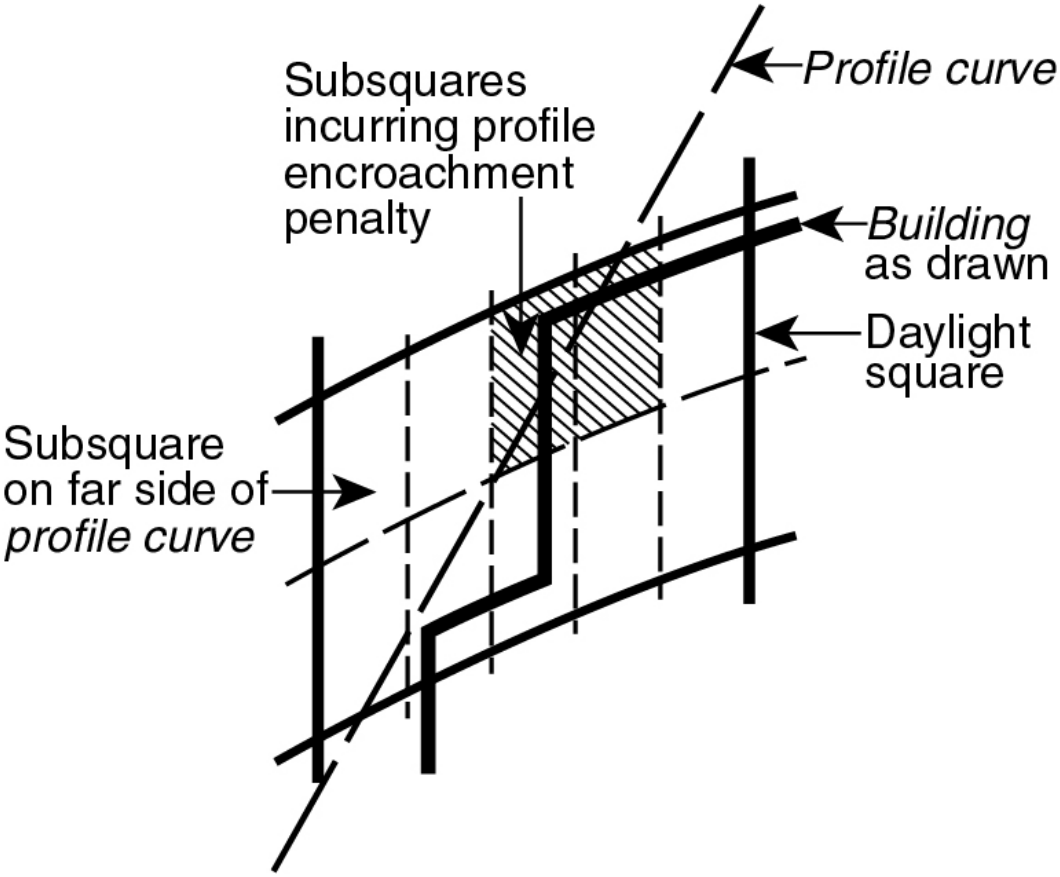


PROFILE ENCROACHMENT INCURRING PROFILE PENALTY

(81-274a)

(5) If the #building# encroaches beyond the #profile curve#, the entire subsquare in which the #profile encroachment# is located is given an additional weighted value. The total penalty is the additional weighted value of the daylight square multiplied by the negative value of the subsquare. The penalty is applied even if the subsquare does not lie entirely beyond the curve.

(b) Calculate daylight blockage

Count the number of blocked daylight squares and subsquares which are above the curved line representing an elevation of 70 degrees. A negative sign is to be given to this number. Total value of daylight blockage in the example is -20.5.

(c) Calculate unblocked daylight credit

Count the number of unblocked daylight squares which are below the curved line representing an elevation of 70 degrees and within the area defined by the intersection of the #far lot line# with the #street line# of the #vantage street# and the intersection of the #near lot line# with the #street line# of the #vantage street#. The total is given a positive value and multiplied by 0.3, the value of these daylight squares. This provision is not applicable where the #vantage street# is a designated #street# on which #street wall# continuity is required by the provisions of Section 81-43 (Street Wall Continuity Along Designated Streets). In the example, the number and value of squares unblocked below 70 degrees = +0.0.

(d) Calculate profile daylight blockage

Count the number of blocked daylight squares which are entirely on the far side of the #profile curve# when viewed from the #vantage point# and the number of blocked or partially blocked subsquares which are on the far side of the #profile curve#. All of these daylight squares and subsquares are given a negative sign, multiplied by their respective weighted values in the table in paragraph (a)(4) of this Section and the products added. Subsquares are counted as one tenth of a daylight square. In the example,

the total value of profile daylight blockage = -0.45.

(e) Calculate available daylight

Count the number of daylight squares available to the site. This is the total number of daylight squares and subsquares, calculated to the nearest tenth, that are above the curved line representing the boundaries of the potential sky area available to the site, said boundaries being delineated in accordance with the provisions of paragraph (f) of Section 81-273 (Rules for plotting buildings on the daylight evaluation chart). Available daylight in the example is 89.9.

(f) Calculate daylight remaining

Calculate the remaining or unblocked daylight by adding the results of paragraphs (b) through (e) of this Section. Daylight remaining in the example is (-20.5) + (0.0) + (-0.45) + (89.9) = 68.95.

(g) Calculate daylight score

Compute the remaining daylight score from paragraph (f) of this Section, as a percentage of the available daylight from paragraph (e) of this Section. The percentage is the daylight score for the proposed #building# from that #vantage point#. In the example, the daylight score is 68.95/89.9 = 76.70 percent for #vantage point# one (V1).

(h) Calculate overall daylight score

(1) The street score is the arithmetic mean of all the scores from all #vantage points# along a #vantage street#. When a #zoning lot# fronts on only one #street#, the street score is also the overall score. Where a #zoning lot# has more than one #street# frontage along any one #vantage street#, the street score is the average of all those individual #street# frontage scores computed pursuant to paragraph (b) of Section 81-275 (Special conditions), weighted by the lengths of all those #street# frontages.

(2) Where a #zoning lot# fronts on more than one #street#, the overall score is the average of the street scores, weighted by the length of their respective #vantage street# frontages.

(i) The passing score

To be in compliance with these regulations, a #zoning lot# must have an overall score of not less than 75 percent, with no single #street# frontage having a street score of less than 66 percent. If a #zoning lot# fronts only on one #street#, a daylight evaluation score of not less than 75 percent is required for that #street# frontage. If a street score is less than 66 percent, or if the overall daylight score is less than the passing score of 75 percent, a modest improvement in either the street score or the overall score may be obtained by scoring the relative reflectivity of the #building's# surface, as specified in Section 81-276 (Modification of score for reflectivity). The passing daylight score of 75 percent is equivalent to the average daylight levels of Midtown #buildings# built as-of-right under the 1916 and 1961 Zoning Resolutions. The minimum requirement of 66 percent on one frontage is equivalent to the daylight level of any #interior lot# #building# built in Midtown under the 1916 Zoning Resolution in a two-times height district. However, if any one frontage is less than 75 percent, other frontages must be greater than 75 percent to reach the passing overall daylight score. This allows flexibility in #building# design while maintaining daylight standards within the levels established by #buildings# built as-of-right under the 1916 and 1961 Zoning Resolutions. (See illustration of Daylight Evaluation Score Results)

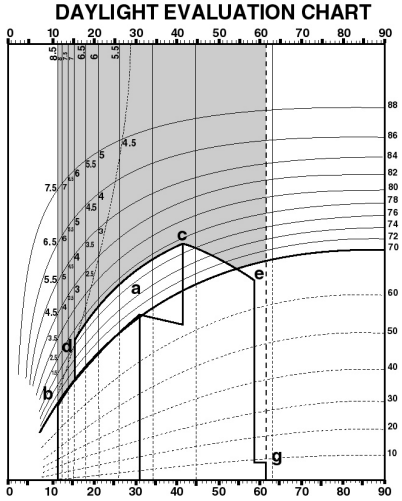


SCORING SUMMARY
(Vantage point one)

| SECTION | | SCORE |
|---|---|---|
| 81-274 (b) | Squares above 70° blocked | –20.5 |
| 81-274 (c) | Squares below 70° open | + 0.0 |
| 81-274 (d) | Profile encroachment penalty<br>.1 x 1.5 = .15<br>.3 x 1 = .45 | – 0.45 |
| | Total Blockage | – 20.95 |
| 81-274 (e) | Available daylight squares | 89.9 |
| 81-274 (f) | Remaining daylight | 68.95 |
| 81-274 (g) | DAYLIGHT SCORE | |
| | 68.95 / 89.9 = 76.70 | 76.70% |

DAYLIGHT EVALUATION SCORE RESULTS

(81-274i)

## 81-275 - Special conditions

LAST AMENDED
5/13/1982

Notwithstanding the provisions of Sections 81-271 to 81-274, inclusive, relating to Alternate Height and Setback Regulations-Daylight Evaluation, the provisions of this Section shall apply under special conditions, as follows:

(a) For #zoning lots# with #street# frontages exceeding 250 feet

(1) Where the length of the #street# frontage is more than 250 feet but not more than 500 feet, the #building# as viewed from each #vantage point# shall be plotted on a #daylight evaluation chart# that extends in both directions from the 90 degree line on the horizontal axis. In each case, the number of available daylight squares for daylight evaluation shall be the number of squares between the #far lot line# and the #near lot line#.

(2) Where the length of the #street# frontage is more than 500 feet, daylight evaluations shall be made from three #vantage points#, as follows: #vantage points# one and two, each 250 feet distant from a #far lot line# extended to the #center line of the street#, and #vantage point# three, on the #center line of the street#, half-way between the other two #vantage points#. The #daylight evaluation charts# for the first two #vantage points# shall in each case encompass a view extending from the #far lot line# to the 90 degree line on the horizontal axis and the number of available daylight squares shall be the number of squares between the #far lot line# and the 90 degree line and above the curved line representing an elevation angle of 70 degrees. The #daylight evaluation chart# for the third #vantage point# shall extend in both directions from the 90 degree line on the horizontal axis to the vertical lines representing the points on the #front lot line# directly opposite #vantage points# one and two. The number of available daylight squares for daylight evaluation shall be the number of daylight squares between such vertical lines and above the curved line representing an elevation angle of 70 degrees.

(b) For #zoning lots# with interrupted #street# frontages

Where a #zoning lot# has two or more #front lot lines# on the same #street# which are separated by frontage of an intervening #zoning lot#, there shall be two daylight evaluations for each such #front lot line#. Each #lot line# of the #zoning lot# that intersects the #street line# shall be treated as a #far lot line# for the purposes of daylight evaluation from a #vantage point#.

(c) Where #front lot lines# are curved or broken

If the #front lot line# of the #zoning lot# is curved or bent, the extremities of such #front lot line# shall be connected by a straight line, which shall be considered the #front lot line#.

## 81-276 - Modification of score for reflectivity

LAST AMENDED
2/2/2011

Where #zoning lots# have utilized the #daylight evaluation chart# but a street score along one frontage is less than 66 percent or the overall score is less than 75 percent, a modest improvement in either the street score or the overall score of a #zoning lot# within a #building# which reflects more light than a medium gray or glass #building# may be obtained by scoring the relative reflectivity of the #building's# surface.

The use of reflectivity is optional and not necessary if a passing score can be obtained under Section 81-274 (Rules for determining the daylight evaluation score). Reflectivity scoring permits greater design flexibility for a light-colored #building# than a dark one.

Because the greatest reflectivity comes from the upper portions of #buildings#, the value of reflected light is credited against the amount of daylight blocked by the portions of the #building# above an elevation angle of 70 degrees from the #center line of the street#.

Reflectivity has two components: the reflectance of the surface material and the orientation of the material to the sun.

(a) Reflectance

Reflectance values of materials will be determined by the Department of Buildings after the submission of samples of proposed surface materials by the applicant.

(1) Mixed reflectance

A #building# of several surface materials will have a reflectance value determined by multiplying each material's reflectance value by its percentage of the total wall surface and adding the products. For example, a #building# that is 60 percent limestone and 40 percent clear glass would have a reflectance of .60 x .45 (the reflectance of limestone) plus .40 x .15 (the reflectance of clear glass) or an overall reflectance of .33.

(2) Relative reflectance

In order to be included in the reflectivity score of a #zoning lot#, the material of the #building# must reflect more light than a medium gray or glass #building#. The reflectance value of a medium gray or glass #building# in Midtown is .15 so that the #building# with an overall reflectance of .33, given in the example in paragraph (a)(1) of this Section, would be increasing the expected reflectance by .33 minus .15 which equals .18.

Examples of potential reflectance values for different types of surface finishes are shown on the following chart.

REFLECTANCE VALUES - EXAMPLES OF BUILDING MATERIALS

| | |
|---|---|
| White plaster or paint or glaze | .80 to .90 |

| | |
|---|---|
| Aluminum paint | .55 |
| Green paint | .50 |
| Red paint | .26 |
| Light gray paint | .25 |
| Flat black paint | .06 |
| Polished aluminum, stainless steel | .85 |
| Polished light marble | .40 to .50 |
| Light granite, limestone | .45 |
| Copper, brass lead | .60 to .80 |
| Smooth concrete | .45+ |
| Rough concrete | .40 |
| Asbestos cement | .31 |
| Light buff brick | .48 |
| Dark buff brick | .40 |
| Light red brick | .45 |
| Dark red glazed brick | .30 |
| Dark red brick | .12 |
| Slate | .11 |
| Wood | .22+ |
| Glass: double glazing with reflective coating* | |
| Solarcool(r) bronze or gray | .35 to .36 |

| | |
|---|---|
| Solarban(r) clear | .36 to .44 |
| Solarban(r) bronze | .18 |
| Solarban(r) gray | .14 |
| Glass: tinted double glazing | |
| Gray | .08 |
| Bronze | .09 |
| Solex(r) (green or blue) | .12 |
| Glass: clear double glazing | .15 |
| Glass: clear single glazing | .08 |

_____

* Reflectance varies according to which layer the reflective coating is placed on, but can be precisely determined for each position

Sources:

Anderson, Bruce. Solar Energy: Fundamentals in Building Design. (McGraw Hill, New York 1977).

Callendar, John Hancock. Time Saver Standards: A Handbook of Architectural Design. (McGraw Hill, New York, 4th Edition, 1964).

PPG Industries, Inc., Architectural Glass Products (G702). PPG, Pittsburgh, PA., 1977.

(b) Facade orientation

Orientation of the facade of the #building# is the second component required for measurement of reflectivity. Because reflectivity varies according to the orientation of the facade, the orientation value for a particular surface from the chart below is multiplied by the reflectance of the surface to ascertain the amount of daylight reflectivity.

The orientation values are shown on the following reflectivity chart. Orientation angles shall be rounded to the nearest 22.5 degrees.

| Orientation based on True North | | Orientation Value |
|---|---|---|
| North: | 0° | .09 |

| | | |
|---|---|---|
| | 22.5° | .15 |
| | 45.0° | .22 |
| | 67.5° | .40 |
| East: | 90.0° | .57 |
| | 112.5° | .72 |
| | 135.0° | .87 |
| | 157.5° | .93 |
| South: | 180.0° | 1.00 |
| | 157.5° | .93 |
| | 135.0° | .87 |
| | 112.5° | .72 |
| West: | 90.0° | .57 |
| | 67.5° | .40 |
| | 45.0° | .22 |
| | 22.5° | .15 |

(c) Reflectivity Score

In order to obtain the reflectivity score for each view of the #building#, first count the daylight squares and subsquares which are blocked by the #building# on the #daylight evaluation chart# above an elevation angle of 70 degrees. This number shall be calculated separately for every orientation of each facade and multiplied by the relative reflectance of that portion of the #building# and the orientation value.

Reflectance = (% material A x reflectance material A) + (% material B x reflectance material B)

Relative reflectance (RR) = reflectance minus .15

Reflectivity score = RR x facade orientation value x daylight squares blocked above 70°.

The reflectivity scores for the several orientations are then added together to give the reflectivity score for that view of the #building# as a whole from the #vantage point# represented on the #daylight evaluation chart#.

The reflectivity score is added to the daylight remaining after accounting for daylight blockage as calculated in paragraph (f) of Section 81-274

The sum is then calculated as a percentage of the available daylight squares calculated in paragraph (e) of Section 81-274 to give the adjusted daylight score for the #zoning lot# from the #vantage point# represented on the #daylight evaluation chart#.

The adjusted street score along a particular #vantage street# is obtained by calculating the mean average of the adjusted daylight scores from all #vantage points# along the #vantage street#.

The adjusted overall score for the #zoning lot# is obtained by calculating the average of the adjusted street scores weighted by the lengths of their respective #vantage street# frontages.

(d) Limits on adjusted scores

(1) Adjusted street score

The adjusted street score shall not be more than six percentage points higher than the street score not adjusted for reflectivity.

If reflectivity scoring is used to bring the adjusted overall score for the #zoning lot# above 75 percent (the passing overall score), the street score for each #street# frontage without adjustment for reflectivity shall be not less than 66 percent.

(2) Adjusted overall score

The adjusted overall score shall not be more than six percentage points higher than the overall score not adjusted for reflectivity.

If the reflectivity scores for any single #street# frontage are used to bring the adjusted street score for that frontage above 66 percent (the passing score for a single #street# frontage), the overall score of the #zoning lot# without adjustment for reflectivity shall be not less than 75 percent.

## 81-277 - Special permit for height and setback modifications

LAST AMENDED
11/25/1997

In C5-3, C6-6 or C6-7 Districts, where a special permit application is made pursuant to Section 74-71 (Landmark Preservation) for modification of #bulk# regulations on a #zoning lot# containing a landmark, or where a special permit application is made pursuant to Section 74-79 (Transfer of Development Rights From Landmark Sites) and the #floor area# represented by such transferred development rights exceeds 20 percent of the basic maximum #floor area# permitted on the #zoning lot# receiving the development rights, such application may include a request for modification of the height and setback regulations set forth in Sections 81-261 to 81-275, inclusive, relating to Alternate Height and Setback Regulations - Daylight Evaluation. The City Planning Commission may authorize such height and setback modifications subject to the following conditions:

(a) The applicant shall demonstrate to the satisfaction of the Commission that a feasible design for the proposed #development# or #enlargement# which accommodates the permitted #floor area# is not possible under the provisions of Sections 81-271 to 81-276, inclusive, and shall further present for the proposed design a complete daylight evaluation with an explanation of street score or overall daylight score deficiencies.

(b) The Commission shall make the following findings in addition to any required under the applicable provisions of Sections 74-71 or 74-79:

(1) that the requested departure from the alternate height and setback regulations is the minimum amount necessary to achieve a feasible #building# design;

(2) that the disadvantages to the surrounding area resulting from reduced light and air access will be more than offset by the advantages of the landmark's preservation to the local community and the City as a whole; and

(3) that where the landmark is located on the #zoning lot# proposed for #development# or #enlargement# or on a lot contiguous thereto or directly across a #street# therefrom, the modification of the alternate height and setback regulations will adequately protect the setting for the landmark.

## 81-28 - Minimum Distance Between Buildings

LAST AMENDED
2/2/2011

On any single #zoning lot# within the #Special Midtown District#, if two or more #buildings# or portions of #buildings# are detached from one another at any level, such #buildings# or portions of #buildings# shall at no point be less than eight feet apart.