Zoning Resolution

THE CITY OF NEW YORK
Zohran K. Mamdani, Mayor

CITY PLANNING COMMISSION
Sideya Sherman, Chair

139-50 - GOWANUS CANAL WATERFRONT ACCESS PLAN

File generated by https://zr.planning.nyc.gov on 11/24/2026

139-50 - GOWANUS CANAL WATERFRONT ACCESS PLAN

LAST AMENDED
11/23/2021

The provisions of Article VI, Chapter 2 (Special Regulations Applying in the Waterfront Area), shall apply, except as superseded, supplemented or modified by the provisions of this Section, inclusive.

The boundaries of the area comprising the Gowanus Canal Waterfront Access Plan, and the location of certain features mandated or permitted by the Plan, are shown on the maps in Appendix B of this Chapter.

The waterfront access plan has been divided into Parcels as shown on Map 1 of Appendix B of this Chapter, consisting of tax #blocks# and lots existing on September 22, 2021, as follows:

Parcel 1: Block 417, Lots 1, 10, 14, 21

Parcel 2: Block 424, Lots 1, 20

Parcel 3: Block 431, Lots 1, 2, 5, 6, 7, 12, 17, 43

Parcel 4: Block 425, Lot 1

Block 432, Lots 15, 25, 7501

Parcel 5: Block 439, Lot 1

Parcel 6a: Block 438, Lot 7

Parcel 6b: Block 438, Lots 1, 2, 3

Block 445, Lots 1, 7, 8, 11, 20, 50

Parcel 7: Block 452, Lots 1, 5, 19

Block 458, Lot 1

Parcel 8a: Block 453, Lots 1, 21

Parcel 8b: Block 453, Lot 26

Parcel 8c: Block 453, Lots 30, 31, 32, 33, 35, 36, 38, 39, 41, 42, 43, 44, 44, 45, 46, 48, 49, 50, 51

Parcel 8d: Block 453, Lot 54

Parcel 9: Block 967, Lot 1

Parcel 10: Block 967, Lot 24

Parcel 11: Block 972, Lots 1, 43, 58

Parcel 12a: Block 462, Lots 12, 14

Parcel 12b: Block 462, Lots 6, 8, 9, 42, 44

Parcel 12c: Block 462, Lots 1, 3, 4, 5, 50, 51

Parcel 13: Block 466, Lot 19

Parcel 14a: Block 466, Lots 17, 60

Parcel 14b: Block 466: Lot 1

Parcel 14c: Block 466, Lot 46

Parcel 15a: Block 471, Lot 125

Parcel 15b: Block 471, Lot 104, 110, 114, 116

Parcel 16: Block 471, Lots 1,100

Parcel 17: Block 471, Lot 200

For the purposes of this Section, inclusive, the definition of #development# shall be as set forth in Section 62-11 (Definitions).

139-51 - Area-wide Modifications

LAST AMENDED
11/23/2021

The provisions of Article VI, Chapter 2 (Special Regulations Applying in the Waterfront Area) shall be modified in the area comprising the Gowanus Canal Waterfront Access Plan by the provisions of this Section.

(a) All #waterfront public access areas#

(1) Balconies

Balconies complying with the provisions of Section 23-62 (Balconies) shall be permitted obstructions in #waterfront public access areas#, provided the depth of obstruction is limited to four feet, and provided they are located at or above the floor level of the third #story# above grade of the #building#.

(2) Sun control devices

Awnings and other sun control devices shall be permitted obstructions in #waterfront public access areas#. However, when located at a level higher than the first #story#, excluding a #basement#, all such devices:

(i) shall be limited to a maximum projection from a #building# wall of 2 feet, 6 inches; and

(ii) shall have solid surfaces that, in aggregate, cover an area no more than 30 percent of the area of the #building# wall (as viewed in elevation) from which they project.

(3) Kiosks

Where a #supplemental public access area# exceeds 15,000 square feet, a kiosk shall be a permitted obstruction in such #supplemental public access area# with an area up to 400 square feet, including roofed areas.

(b) #Shore public walkways#

(1) Width of circulation paths

#Shore public walkways# shall provide a required circulation path with a minimum clear width of 10 feet. Secondary paths, where provided, shall have a minimum clear width of at least 4 feet, 6 inches.

(2) Level of circulation paths

At least 80 percent of a required circulation path shall be located at a level no less than six feet above the #shoreline#. However, up to 40 percent of such required circulation path may be provided below such level when providing access to a "get-down" located no more than two feet above the level of the #shoreline#.

(3) Access to circulation paths

The provisions of paragraph (a)(1) of Section 62-62 (Design Requirements for Shore Public Walkways and Supplemental Public Access Areas) shall apply, except that where a #shore public walkway# is on a #zoning lot# that is adjacent to a #zoning lot# which has not been improved with a #shore public walkway#, the portion of the circulation path that terminates at the common #zoning# #lot line# may be located within 40 feet of the shoreline.

In addition, for #zoning lots# adjoining #streets# containing bridge structures, the required connection of circulation paths to such a #street# may be waived by certification by the Department of Transportation, pursuant to Section 139-44 (Bridge Connection Requirements).

(4) Grading

The provisions of paragraph (d)(2) of Section 62-61 (General Provisions Applying to Waterfront Public Access Areas) shall be modified so that within five feet of the edge of any planting area, the grade level of such planting area shall be no more than 36 inches higher or lower than the adjoining level of the pedestrian circulation path.

(c) #Supplemental public access areas#

(1) Required Area

The provisions of Section 62-57 (Requirements for Supplemental Public Access Areas) are modified so that, in #mixed use districts#, a total #waterfront public access area# equivalent to 20 percent of the #lot area# is required.

(2) Lawns

The provisions of paragraph (c)(1) of Section 62-62 shall be modified so that a lawn shall only be required where a #supplemental public access area# is greater than 15,000 square feet. The Commission may authorize use of artificial turf within a lawn pursuant to Section 62-822 (Modification of waterfront public access areas and visual corridor requirements).

Where required, a lawn may be substituted for an athletic field of equivalent size, which may be unplanted, and shall be suitable for active recreational use.

(3) Comfort stations

Where a publicly accessible comfort station is provided as part of a #development#, the amount of #supplemental public access area# may be reduced by an amount equal to the size of the comfort station, provided that:

(i) the comfort station has an entrance fronting upon a #waterfront public access area#; and

(ii) a restrictive declaration, acceptable to the Department of City Planning and Department of Parks and Recreation, shall be executed and recorded, binding the owners, successors and assigns to provide and maintain such comfort station for the life of the #development#.

(d) Screening

Wherever a screening buffer is required to be provided, the minimum width of such buffer shall be four feet.

In addition to the waiver allowances of paragraph (c)(2)(iii) of Section 62-62, no screening buffer shall be required along the upland boundary, or portion thereof, which is adjacent to an unenclosed seating area #accessory# to a #Gowanus retail and entertainment use#. Where a screening buffer is so waived, design features shall be utilized to demarcate the #shore public walkway# or #supplemental public access area# from the non-publicly accessible area, which may include, but shall not be limited to, railings, fences, planting boxes, and distinct paving materials.

(e) #Street# treatment

For #streets#, or portions thereof, located within the Gowanus Canal Waterfront Access Plan, the portion of the #street# that is adjacent to a #shore public walkway# shall be improved as

upland access, for a depth equivalent to the adjacent #shore public walkway#. This upland access area shall be designed to include, at a minimum, the following design elements:

(1) a foot path with a minimum clear width of ten feet, providing a connection to both the sidewalk located in the #street# as well as to the adjacent #zoning lot#;

(2) eight linear feet of seating complying with Section 62-652 (Seating) for every 30 feet of #shoreline# upon which the #street# fronts; and

(3) planted areas, containing planting or trees complying with Section 62-655 (Planting and trees) and occupying no less than 25 percent of the continuation area.

The provisions of this paragraph (e) shall not apply to portions of #streets# which will be improved pursuant to a site plan approved prior to November 23, 2021.

(f) Bulkheads

Wherever the United States Environmental Protection Agency requires the installation of a bulkhead in a location seaward of the #zoning lot line#, the area located between the #lot line# and bulkhead may be utilized for the purposes of satisfying the #waterfront public access area# requirements of the #zoning lot#. Where the provisions of this paragraph (f) are utilized, the location of the bulkhead shall be considered the #shoreline# for the purposes of providing

the required #waterfront public access areas#.

(g) Issuance of foundation permits

Notwithstanding the provisions of Section 62-811 (Waterfront public access and visual corridors), within 18 months of November 23, 2021, a foundation permit may be issued for any #development# within the Waterfront Access Plan, upon certification by the Chairperson of the City Planning Commission to the Department of Buildings or Department of Business Services, as applicable, that:

(1) a remedial action plan has been submitted to the Office of Environmental Remediation or the New York State Department of Environmental Conservation, which includes the #zoning lot# containing the #development#; and

(2) a site plan has been submitted to the Department of City Planning, depicting that the proposed foundation will not conflict with the basic dimensional requirements of any required #waterfront public access area# or #visual corridor#, and, in addition, that the proposed foundation shall not conflict with any of the site-specific provisions below, based on the applicable Parcel number and Type:

(i) Type 1

For #developments# on Parcels 1, 2, 3, and 9, the site plan shall additionally designate all other potential locations where a #supplemental public access area# could be located, including:

(a) adjoining each #street# abutting the #shore public walkway#; and

(b) adjoining the #shore public walkway#.

In addition, for all #developments# on #zoning lots# which are not coterminous with the Parcel boundary, the #waterfront public access area# requirement for the depicted #zoning lot# shall be based on the combined #lot area# of the entire Parcel.

(ii) Type 2

For #developments# on Parcels 4, 5, and 12a, the site plan shall additionally designate any area located landward of the #shore public walkway# as necessary to achieve a 50-foot buffer from the #shoreline#.

(iii) Type 3

For #developments# on Parcels 6a, 6b, 8a, 8b, 8d, 11, 13, 14, 15, and 17, where the #developments# are on #zoning lots# which are not coterminous with the Parcel boundary, the #waterfront public access area# requirement for the depicted #zoning lot# shall be based on the combined #lot area# of the entire Parcel.

An application made pursuant to this paragraph (g) shall include a survey of the #zoning lot# and additional documentation set forth Section 62-80 (SPECIAL REVIEW PROVISIONS), inclusive. Except for excavation and foundation permits permitted by this paragraph (g), no other building permits shall be issued except pursuant to Section 62-811.

139-52 - Special Public Access Provisions

LAST AMENDED
11/23/2021

The provisions of Sections 62-50 (GENERAL REQUIREMENTS FOR VISUAL CORRIDORS AND WATERFRONT PUBLIC ACCESS AREAS) and 62-60 (DESIGN REQUIREMENTS FOR WATERFRONT PUBLIC ACCESS AREAS) are modified at the following designated locations which are shown on Map 1 in Appendix B of this Chapter.

139-521 - Parcels 4, 5, 13, 14 and 15

LAST AMENDED
11/23/2021

On Parcels 4, 5, 13, 14 and 15, where a #shore public walkway# is required, such #shore public walkway# shall have a minimum width of 30 feet. The required minimum depth of a #waterfront yard# shall be 30 feet.

139-522 - Parcels 8 and 9

LAST AMENDED
11/23/2021

On Parcels 8a, 8b, 8d and 9, where a #shore public walkway# is required, such #shore public walkway# shall have a minimum width of 30 feet, except that for #shore public walkways# adjoining the First Street Basin, the minimum width shall be 20 feet. The required minimum depth of a #waterfront yard# shall be 30 feet, except that for #waterfront yards# adjoining the First Street Basin, the minimum depth shall be 20 feet. In addition, for parcels where the required #shore public walkway# only adjoins the First Street Basin, the provisions of Section 62-57 (Requirements for Supplemental Public Access Areas) shall not apply. An area equal to at least 25 percent of the area of the #shore public walkway# shall be planted, and one linear foot of seating shall be provided for every 125 feet of frontage along the Gowanus Canal.

139-523 - Parcel 12

LAST AMENDED
11/23/2021

On Parcel 12, where a #supplemental public access area# adjoining an #upland connection# or #street# is provided, such #supplemental public access area# shall be permitted to be provided with a maximum width to depth ratio of 3:1, and the longest side shall be permitted to adjoin the #street#.

139-524 - Parcel 14

LAST AMENDED

11/23/2021

On Parcel 14a, a #supplemental public access area# shall be provided along the entire length of the #lot line# adjoining Parcel 13, connecting the #street# to the #shore public walkway#, and shall comply with the design reference standards applicable to a Type 1 #upland connection# set forth in Section 62-64 (Design Requirements for Upland Connections). Such #supplemental public access area# may coincide with a #visual corridor# required pursuant to Section 139-53 (Special Visual Corridor Provisions).

139-525 - Parcel 17

LAST AMENDED
11/23/2021

On Parcel 17, the total #lot area# utilized in the calculation of required #supplemental public access area# shall include all #zoning lot# portions located within Parcel 17, including portions of a #zoning lot# located within a #street#.

139-53 - Special Visual Corridor Provisions

LAST AMENDED
11/23/2021

The provisions of Section 62-512 (Dimensions of visual corridors) shall be modified by the provisions of this Section.

The lowest level of a #visual corridor# shall be determined by establishing a plane connecting the two points along the #street lines# from which the #visual corridor# emanates at an elevation five feet

above #curb level# with the two points where the prolonged #street lines# intersect the #shoreline#, stabilized natural shore, bulkhead, upland edge of a #waterfront yard# raised pursuant to the provisions of paragraph (b) of Section 62-332 (Rear yards and waterfront yards), or the #base plane# of a #pier# or #platform#, whichever intersection occurs first. Such plane shall then continue horizontally seaward from the line of intersection. #Visual corridors# that are not prolongations of mapped #streets# shall be determined by establishing a plane connecting an elevation five feet above #curb level# at the two points along the #lot line# from which the #visual corridor# emanates with the two points of intersection at the #shoreline#, stabilized natural shore, bulkhead, upland edge of a #waterfront yard# raised pursuant to the provisions of paragraph (b) of Section 62-332, or the #base plane# of a #pier# or #platform#, whichever intersection occurs first.

139-54 - Special Design Standards

LAST AMENDED
11/23/2021

The design requirements of Section 62-60 (DESIGN REQUIREMENTS FOR WATERFRONT PUBLIC ACCESS AREAS) are modified by the provisions of this Section, inclusive.

139-541 - Special design standards for guardrails

LAST AMENDED
11/23/2021

In addition to the provisions of paragraph (a) of Section 62-651 (Guardrails, gates and other protective barriers), guardrails shall comply with the illustrations provided in either paragraph (a) or (b) of this

Section, or shall be of a comparable design which is the minimum modification needed. Where modification is sought, it shall be deemed suitable by the Chairperson of the City Planning Commission in consultation with the Department of Parks and Recreation (DPR).

(a) Option 1: vertical bar guardrail

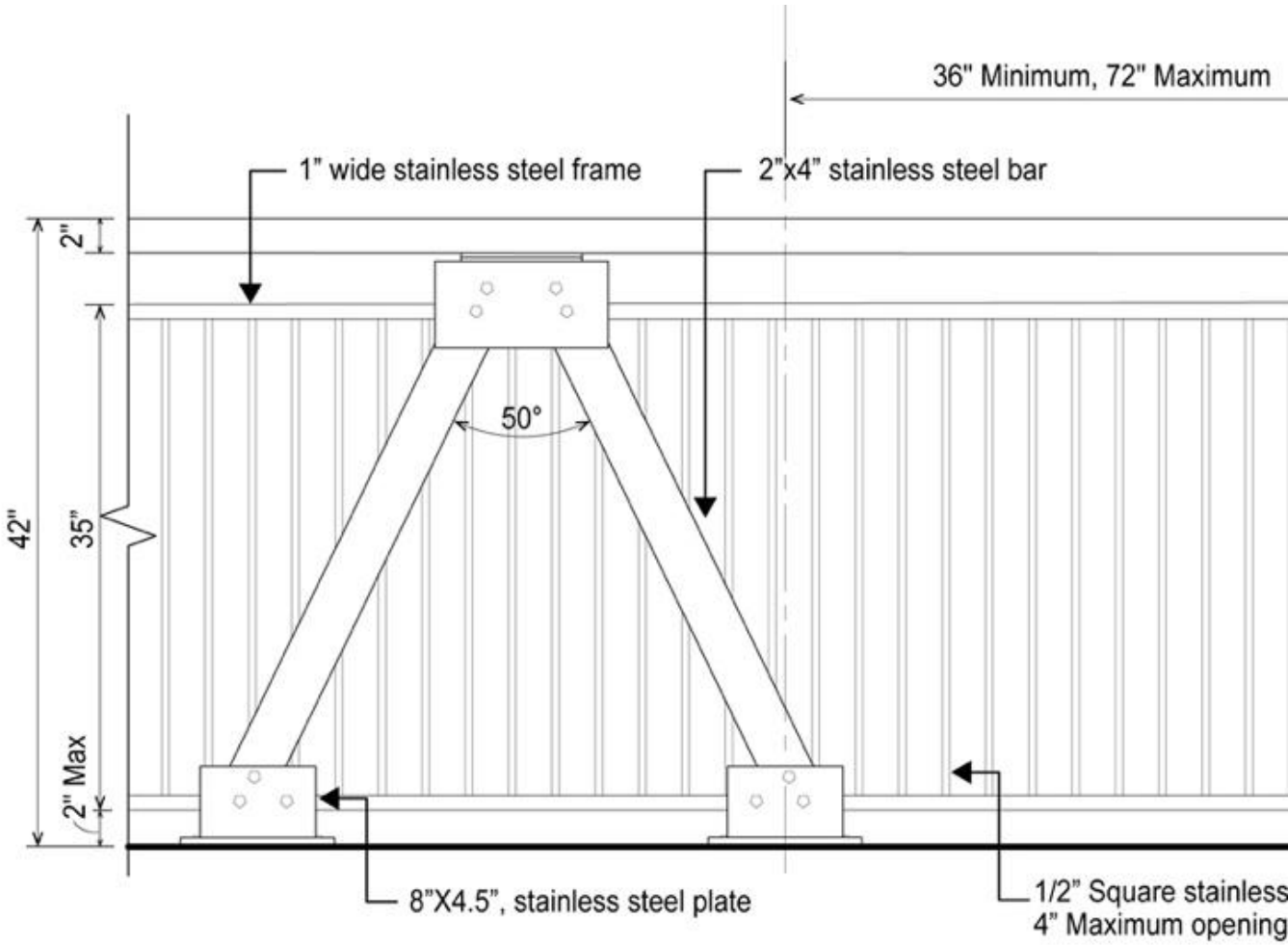

GUARDRAIL (TYPIC
Front Elevation

GUARDRAIL TERMIN
Front Elevation

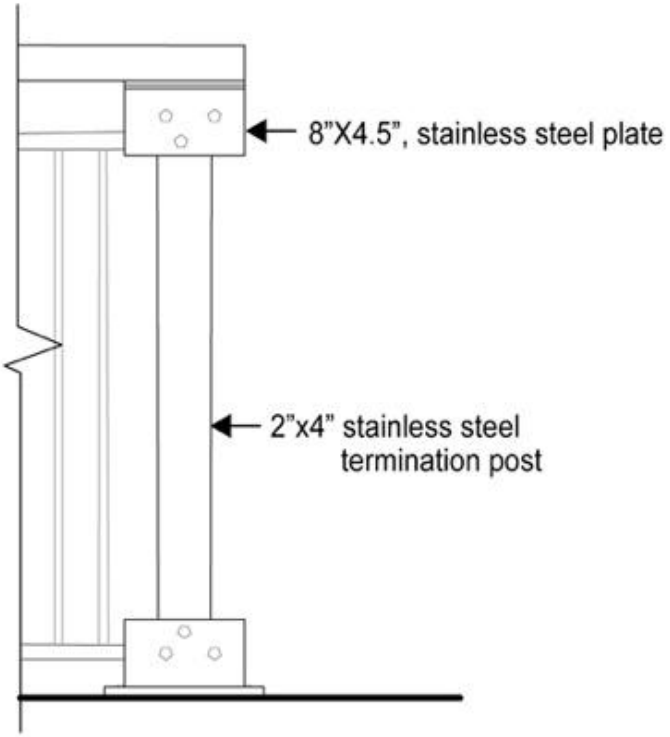

Alternate 1

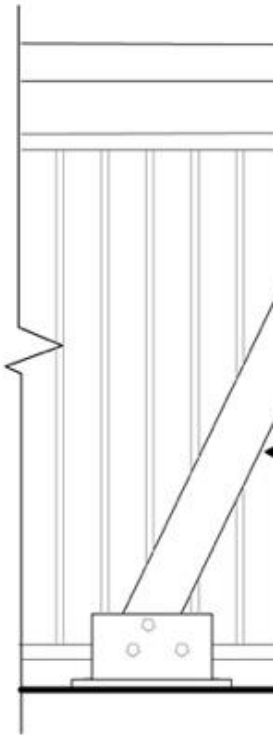

Alte

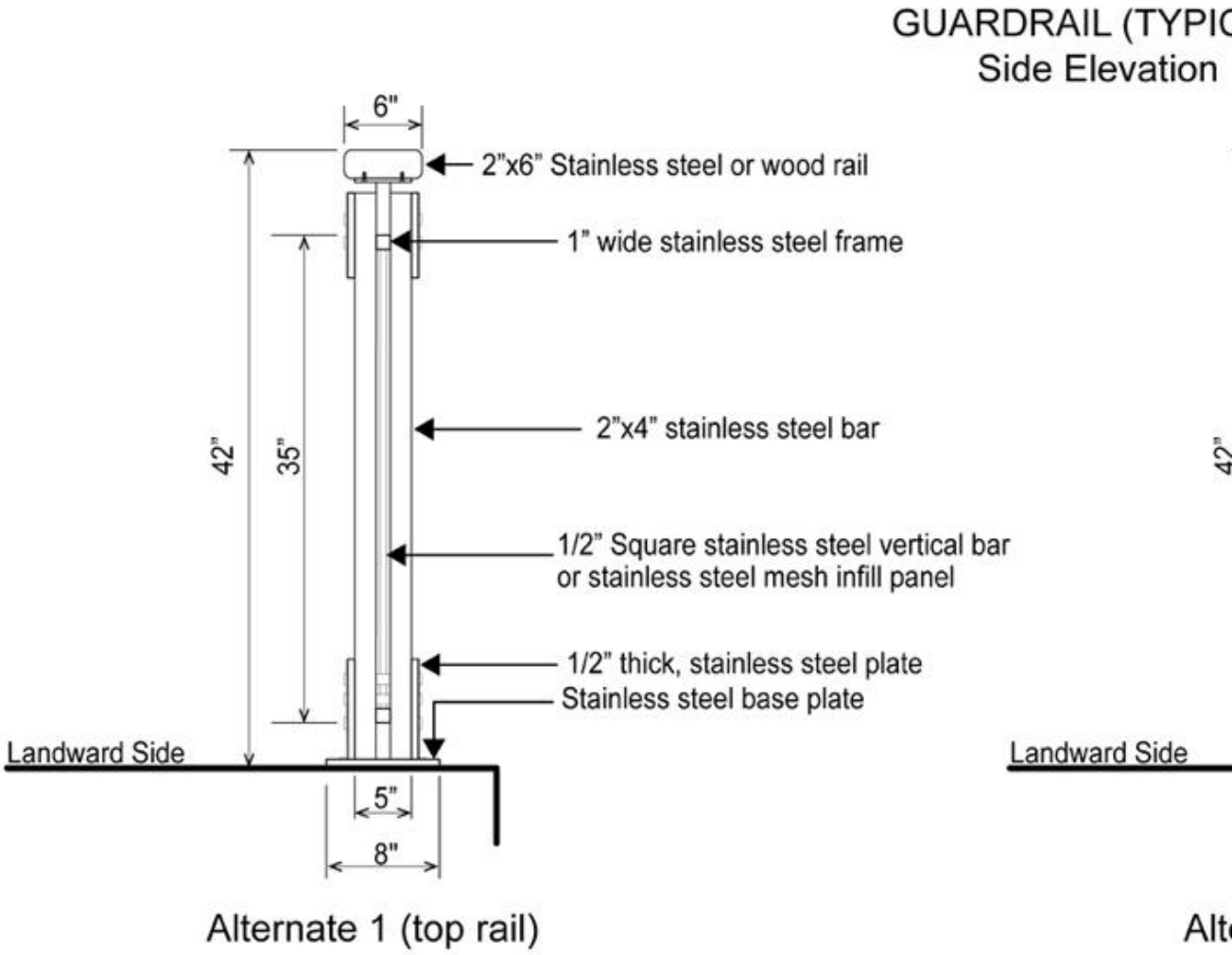

(b) Option 2: mesh guardrail

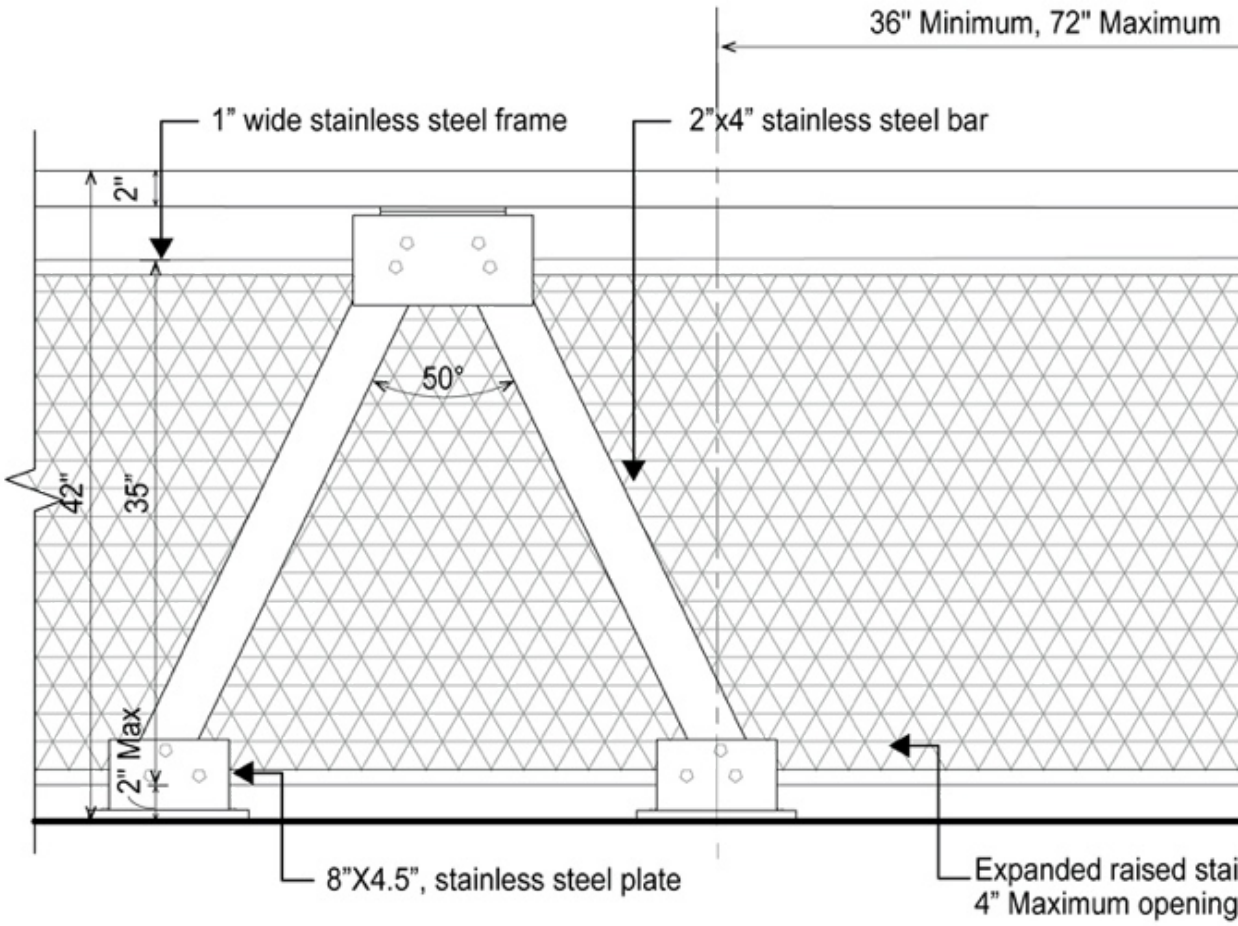

GUARDRAIL (TYPIC
Front Elevation

GUARDRAIL TERMIN
Front Elevation

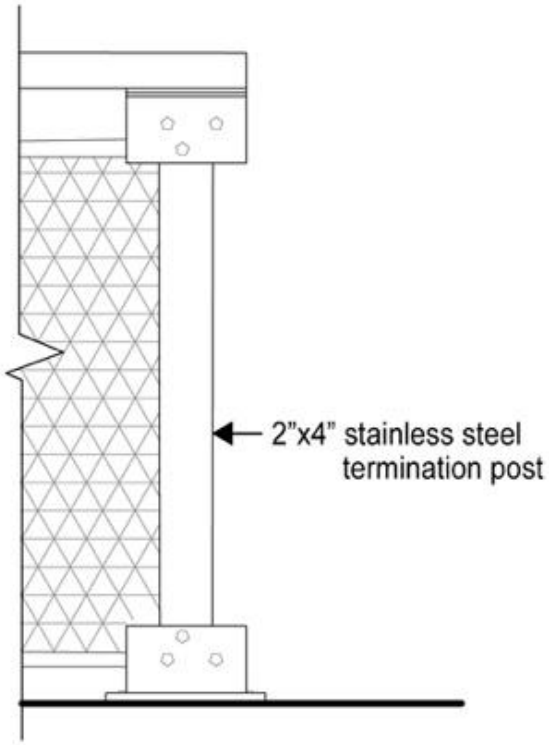

Alternate 1

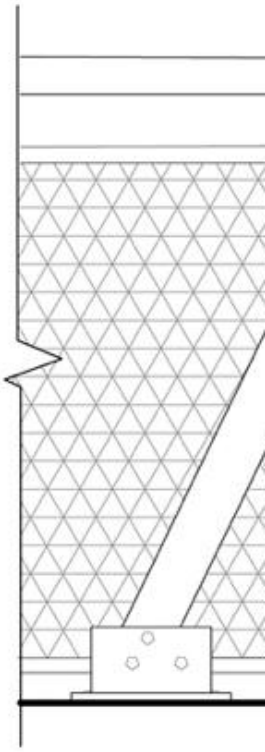

Alte

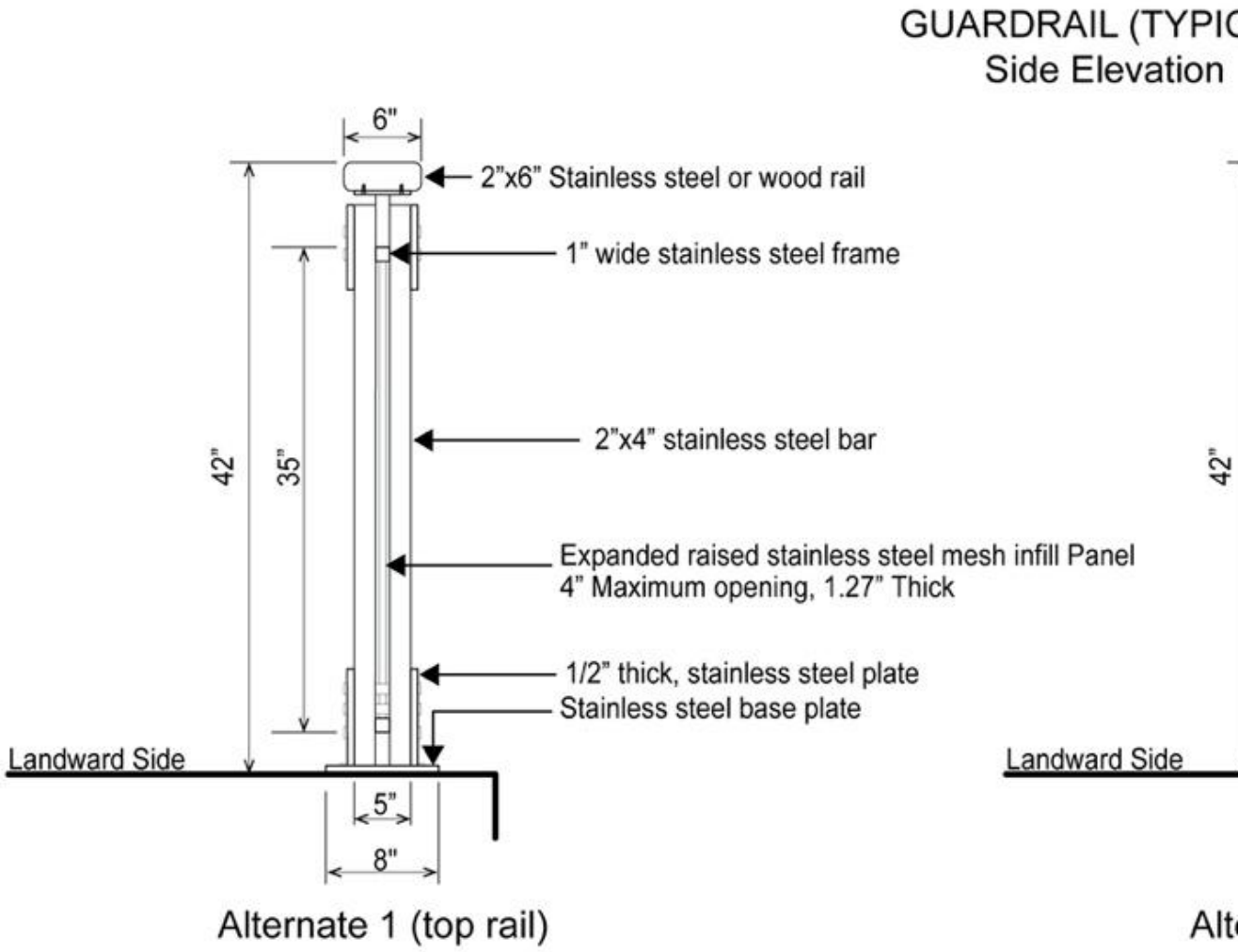

All guardrail components and hardware shall be in unpainted stainless steel and shall conform to any additional standards set forth by DPR.

139-542 - Special design standards for seating

LAST AMENDED

11/23/2021

The design requirements of paragraph (b) of Section 62-62 (Design Requirements for Shore Public Walkways and Supplemental Public Access Areas) and the design reference standards of 62-652 (Seating) shall be modified as follows:

(a) Design feature seating

Planter ledges, seating walls, and seating steps may be provided, and shall be limited to 50 percent of the required seating. Walls and planter ledges shall be flat and smooth with at least one inch radius rounded edges.

(b) Seating depth

For all #waterfront public access areas#, the minimum seat depth requirement of paragraph (b) of Section 62-652 shall be modified to 16 inches.

139-543 - Special design standards for lighting

LAST AMENDED
11/23/2021

The lighting requirements of 62-653 (Lighting) shall be modified such that an average maintained level of illumination not less than 0.5 horizontal foot candle (lumens per foot) shall be provided throughout all walkable areas, and the average illumination to minimum foot candle uniformity ratio shall be no greater than 6:1 within any #waterfront public access area#.

In addition, fixtures providing the required lighting along any public access area shall comply with the lightpost illustration in this Section, or shall be of a comparable design which is the minimum modification needed. Where modification is sought, it shall be deemed suitable by the Chairperson of the City Planning Commission in consultation with the by the New York City Department of

Transportation (DOT).

Fixtures providing supplemental lighting beyond the requirements of this Section need not comply with this illustration.

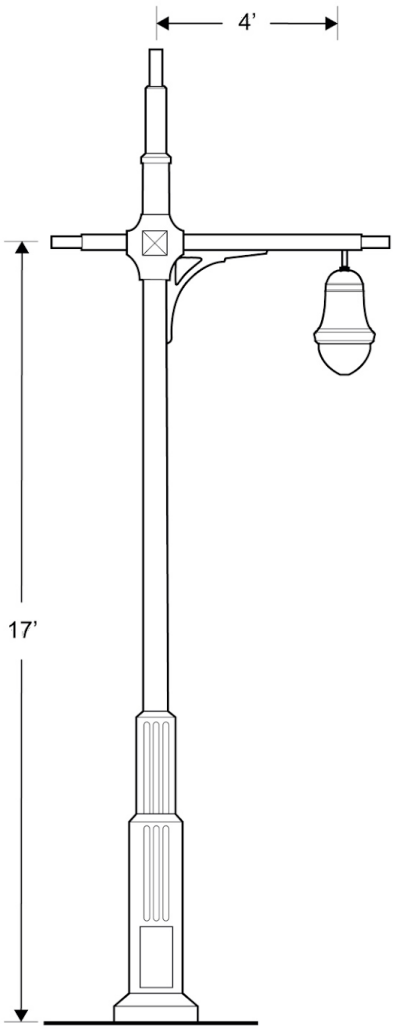

LIGHTPOST
Side Elevation

The lightpost shall conform to the street lighting standard drawings for a 17 foot "TBTA" short pole with "Tear Drop Luminare" set forth by the DOT.

139-544 - Special design standards for planting

LAST AMENDED
11/23/2021

The design requirements of paragraph (c)(1) of Section 62-62 (Design Requirements for Shore Public Walkways and Supplemental Public Access Areas) and the design reference standards of Section 62-655 (Planting and trees) shall be modified as follows:

(a) Reduction in planting requirement

An area equal to at least 35 percent of the area of the #shore public walkway# and #supplemental public access area# shall be planted. Such planting area may be reduced to 30 percent if an amenity is provided in accordance with the following tables:

TABLE 1

Amenity	Reduction per feature (in square feet)
Picnic tables	22 square feet
Historic interpretation elements	20 square feet
Public art pieces	100 square feet
Fountains and water features	150 square feet

TABLE 2

Amenity	Ratio of reduction to size of feature (in square feet)
Active recreation courts	1:1
Tot-lots and playgrounds	1:1
Dog runs	1:1
Boat or kayak launches	1:1.5
Interactive water features	1:1.5

(b) Shade tree substitution

Where shade trees are required, no more than one required shade tree may be substituted by a shading element covering at least 450 square feet, when viewed in plan.

139-545 - Special design standards for paving

LAST AMENDED
11/23/2021

The design reference standards of Section 62-656 (Paving) shall be modified as follows:

(a) #Upland connections#

Paving for driveways and pedestrian paths located within Type 2 #upland connections# shall be subject to the "shared street" standards of the New York City Department of Transportation for roadbeds and sidewalks.

In addition, where a Type 2 #upland connection# is provided with a vehicular turnaround, the paved area of the vehicular turnaround shall be designed with at least two different paving materials, or a single material with at least two different unit paver or slab sizes.

(b) Dimensional requirements

The maximum sizes for unit pavers or concrete slabs shall not apply.

139-55 - Special Signage Regulations

LAST AMENDED
11/23/2021

Any #accessory sign# that is provided adjacent to any #waterfront public access area# shall be limited to a single non-illuminated #sign#, indicating only the name or address of the #building# or commercial establishment to which it is #accessory#, not exceeding 16 inches in height.

139-56 - Special Maintenance and Operation Regulations

LAST AMENDED
11/23/2021

The owners of two or more parcels may, either for purposes of certification pursuant to Section 62-811 or at any time thereafter, submit an alternate plan to the Chairperson of the City Planning Commission for the joint maintenance and operation of #waterfront public access areas# on such parcels, through an association or other entity established for this purpose or by other method. Such plan may include, in addition to provisions for maintenance and operation, alternate provisions with respect to security, liability and any other matters set forth in Section 62-72 (Performance and Maintenance Requirements), as well as special provisions for reporting and monitoring of compliance with obligations for maintenance and operation of the #waterfront public access areas#. Such plan and any instruments as are necessary for its implementation may be approved by the Chairperson and the Commissioner of Parks and Recreation upon a determination that:

(1) implementation of the plan would enhance maintenance and operation of the #waterfront public access areas# consistent with the purposes of this Chapter; and

(2) participation in the plan is available to owners of contiguous parcels identified in the Gowanus Canal Waterfront Access Plan on an equal basis.