Zoning Resolution

THE CITY OF NEW YORK
Zohran K. Mamdani, Mayor

CITY PLANNING COMMISSION
Sideya Sherman, Chair

95-03 - Transit Easement

File generated by https://zr.planning.nyc.gov on 11/26/2026

95-03 - Transit Easement

LAST AMENDED
11/30/2017

Any #development# or #enlargement# involving ground level construction within the #Special Transit Land Use District# shall provide an easement on the #zoning lot# for subway-related use and public access to the subway mezzanine or station when required pursuant to the provisions of Section 95-04.

The issuance by the Department of Buildings of an excavation permit for any #zoning lot# located within the Special District shall be dependent upon prior compliance with the provisions of this Chapter.

The transit easement required on a #zoning lot# shall permit the realization of one or more of the following planning objectives:

(a) the integration and relating of subway station design to surrounding development;

(b) the introduction of light and air to: stations; mezzanines; and other related facilities constructed pursuant to the provisions of Section 95-032 (Determination of transit easements at other stations);

(c) the reduction of conflict between pedestrian movements and station facilities on the #street# level;

(d) the provision of weather protection for subway entrances;

(e) the relation of subway entrances to #commercial# and other transit facilities;

(f) the provision of maximum visual exposure of subway entrances from public areas; and

(g) the elimination or reduction of adverse environmental impact accompanying subway development.

In no event, however, may the easement area be used temporarily or permanently for any other purpose not immediately related to pedestrian amenity, except as hereinafter provided.

95-031 - Selection of transit easement at certain stations

LAST AMENDED
11/30/2017

At the stations specified below, the transit easement required on a #zoning lot# shall constitute a volume whose dimensions above and below #curb level# shall comply with the requirements as set forth in Table A or Table B of this Section, depending on the depth of the proposed subway mezzanine below #curb level#, as established by the Metropolitan Transportation Authority.

Six possible types of transit easements are listed in Table A and in Table B. The applicant for a #development# or an #enlargement# involving ground level construction shall, in consultation with the Metropolitan Transportation Authority and the City Planning Commission, select the easement type that is most appropriate for the location.

TABLE A

MINIMUM DIMENSIONS FOR TRANSIT EASEMENT VOLUME (in feet)

Stations: Houston St., Kips Bay, Lenox Hill and E. 96th St.

Easement Type	Height above #Curb Level# (h)	Depth below #Curb Level#* (D)	Length (L)	Width(W)	#Zoning Lots# less than 10,000 sf	#Zoning Lots# 10,000 sf or more
1	15	20	80	20	x	
2	15	30	80	20	x	x
3	15	30	85	32		x
4	15	25	80	10	x	
5	15	30	80	10	x	
6	15	25	60	20	x	

* See Section 95—054

TABLE B

MINIMUM DIMENSIONS FOR TRANSIT EASEMENT VOLUME (in feet)

Stations: Chatham Square, Grand St., 14th St., 23rd St., UN Plaza, East Midtown and Yorkville

Easement Type	Height above #Curb Level# (h)	Depth below #Curb Level#* (D)	Length (L)	Width(W)	#Zoning Lots# less than 10,000 sf	#Zoning Lots# 10,000 sf or more
1	15	20	80	20	x	
2	15	40	100	20	x	x
3	15	40	85	32		x
4	15	35	100	10	x	
5	15	40	100	10	x	
6	15	35	65	20	x	

* See Section 95—054

Type 1 is appropriate on #zoning lots# of less than 10,000 square feet with adequate lot frontage and where the Metropolitan Transportation Authority provides final access to the subway mezzanine level under a public right-of-way.

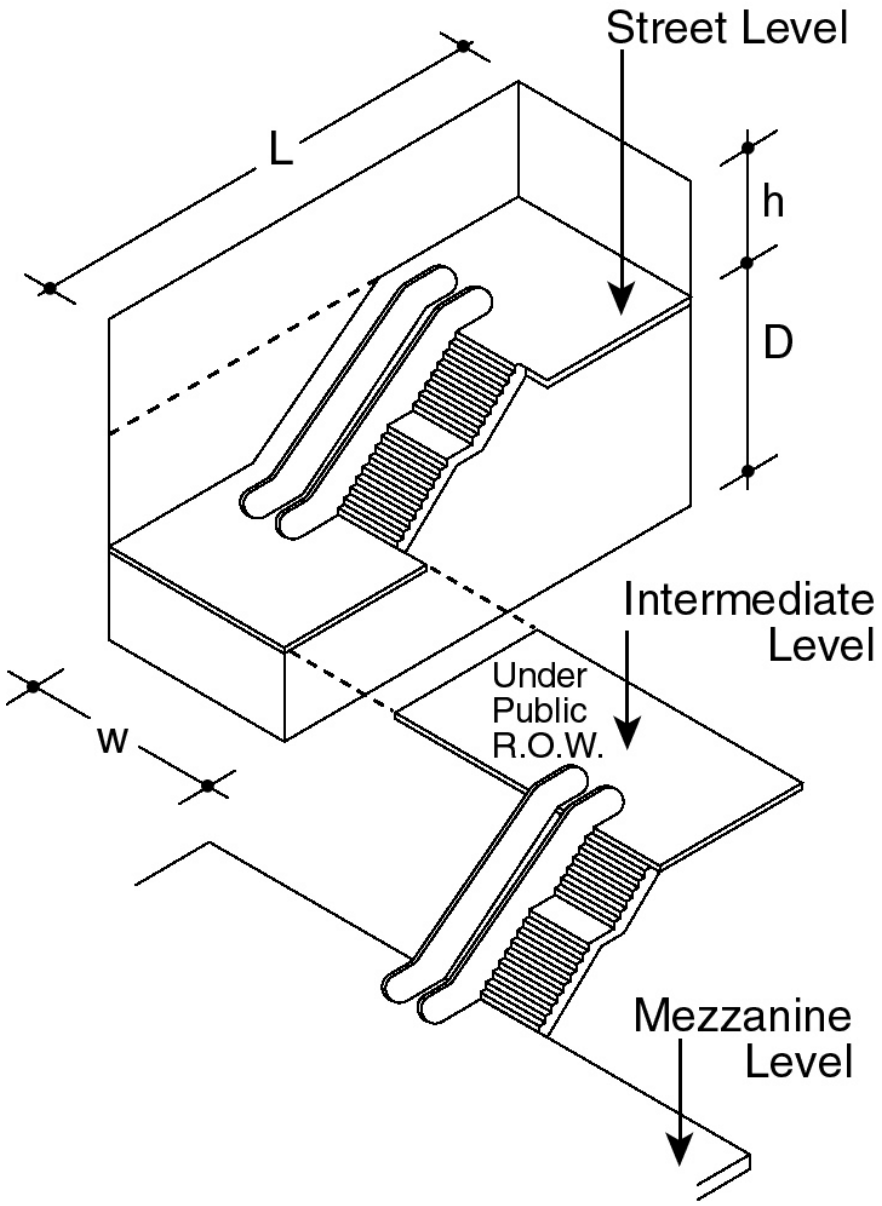

(95-031.1)

Type 2 is appropriate on any size #zoning lot# for providing direct access to the subway mezzanine level by a "straight run" stairway and/or escalator.

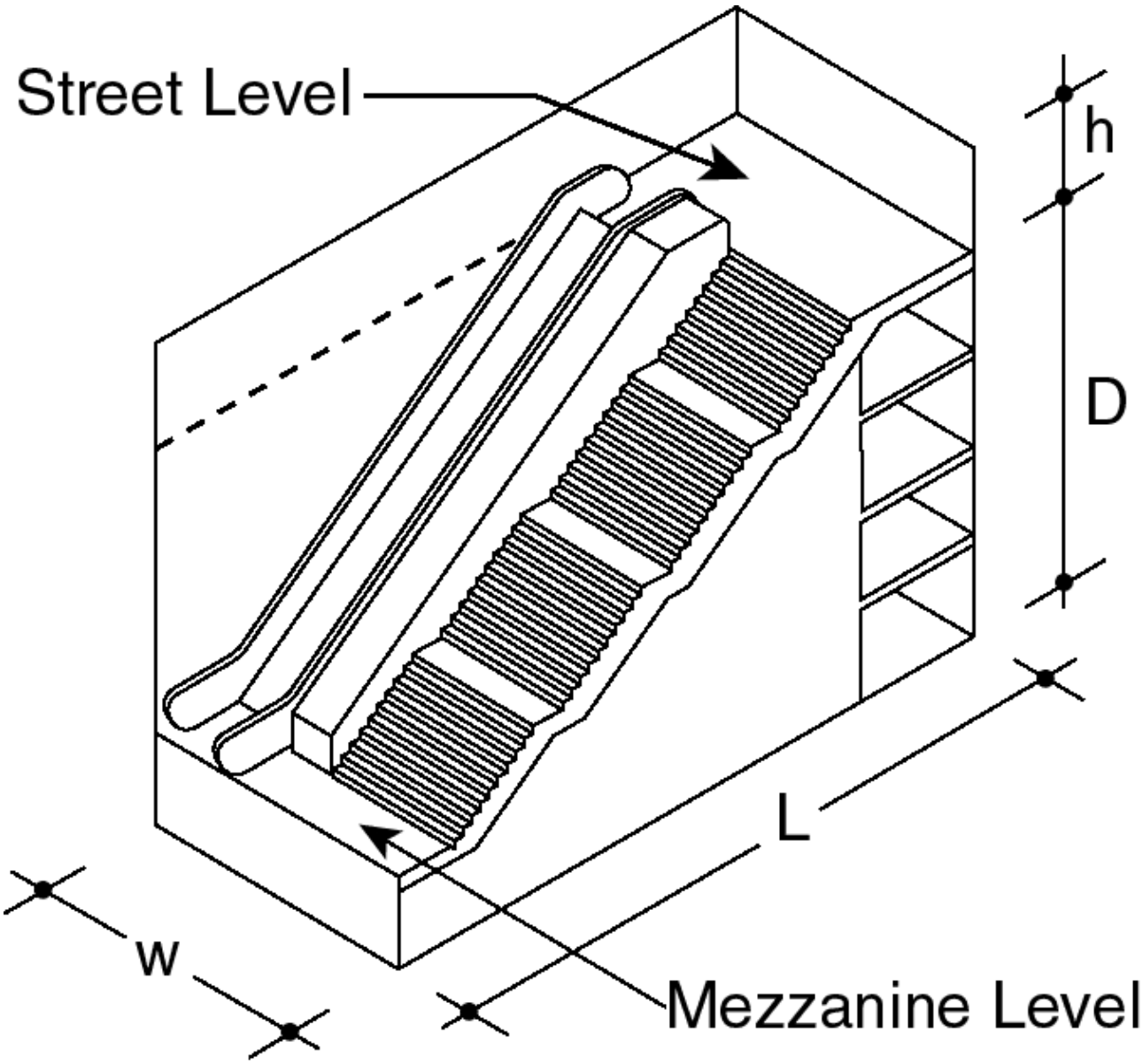

(95-031.2)

Type 3 is applicable to #zoning lots# of 10,000 square feet or more for providing a "turn around" arrangement of stairs.

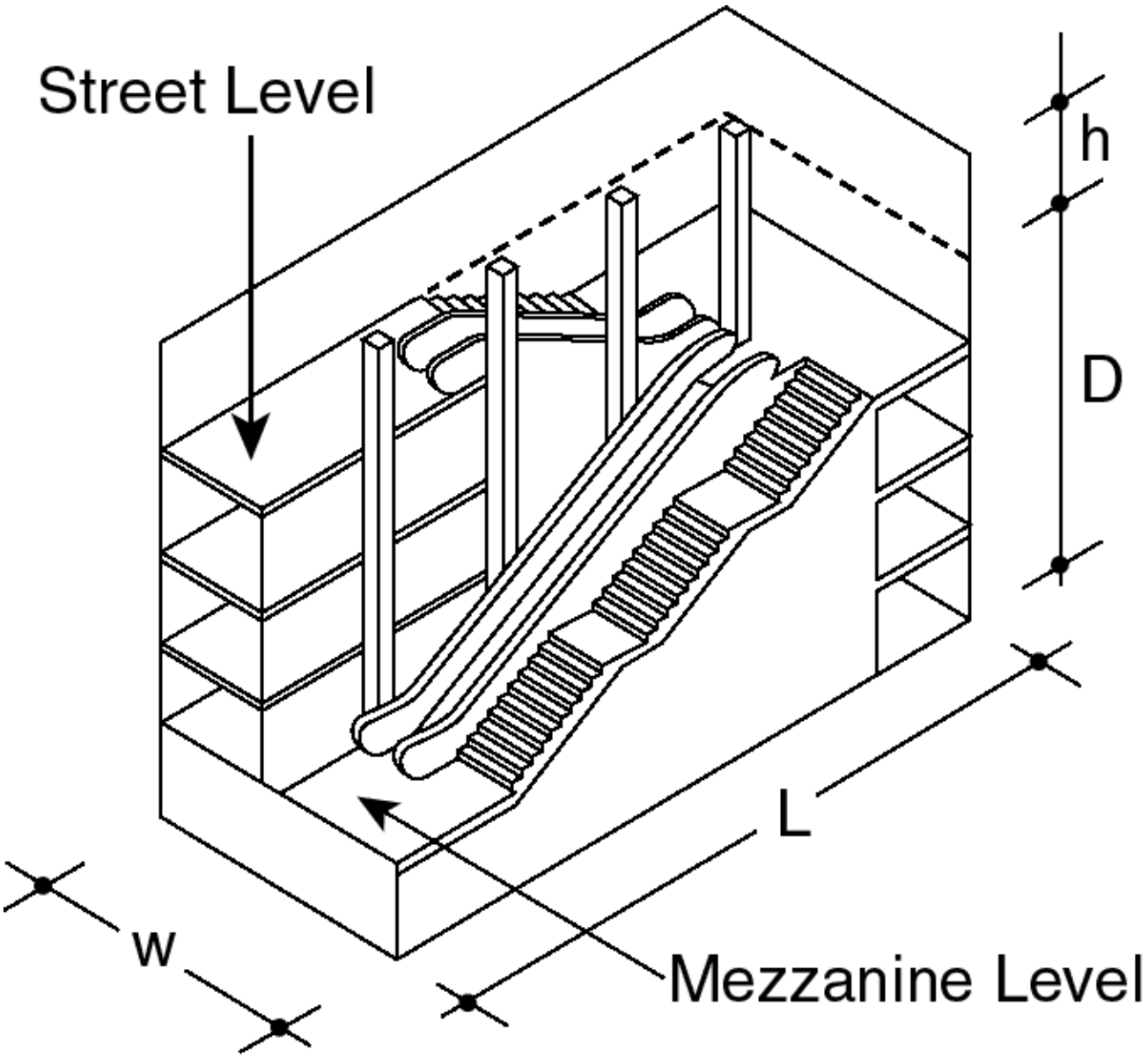

(95-031.3)

Types 4 and 5 are limited to #zoning lots# of less than 10,000 square feet with a narrow lot frontage for a single "straight-run" transit access facility, such as an escalator or stairway.

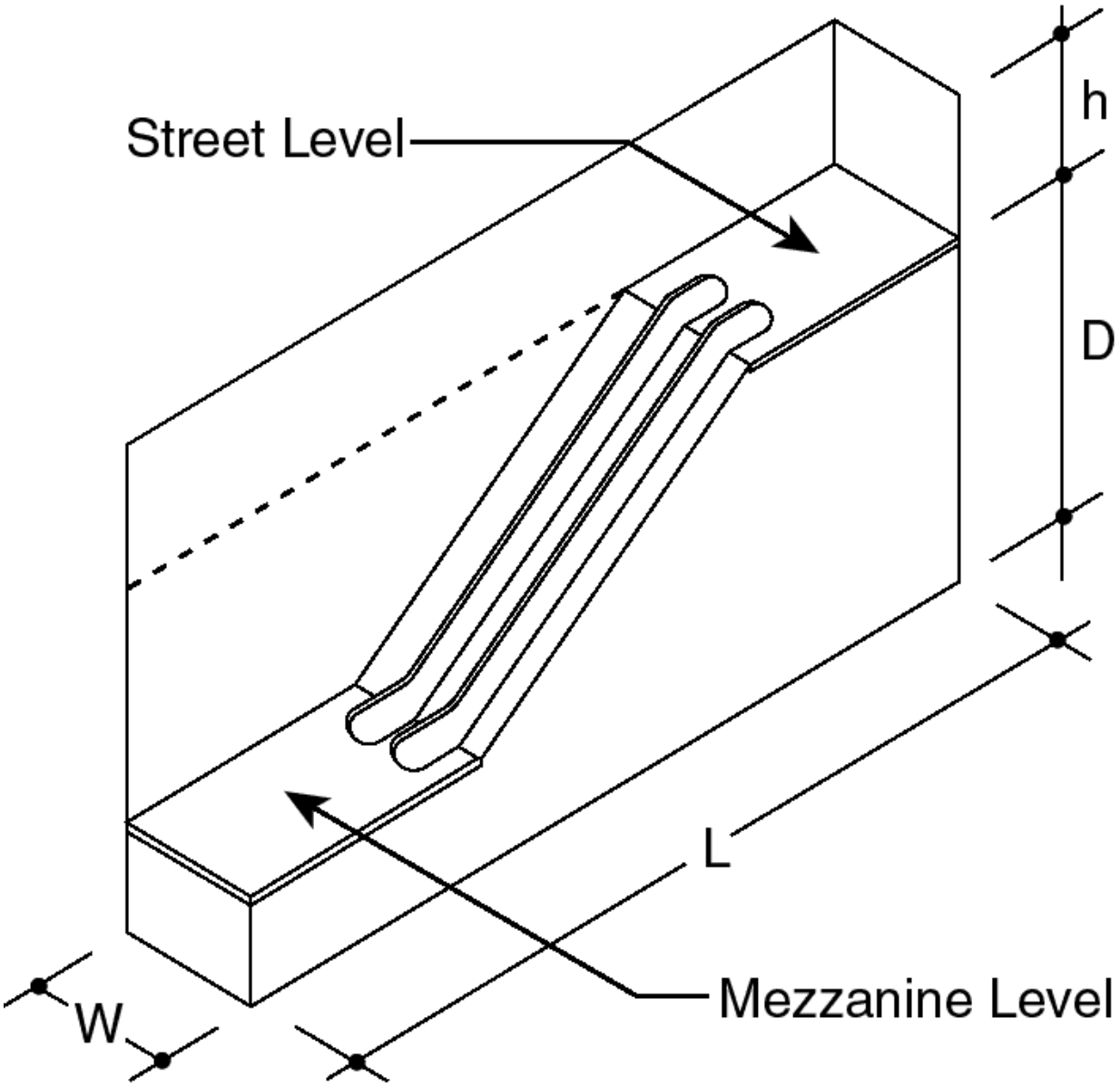

(95-031.4)

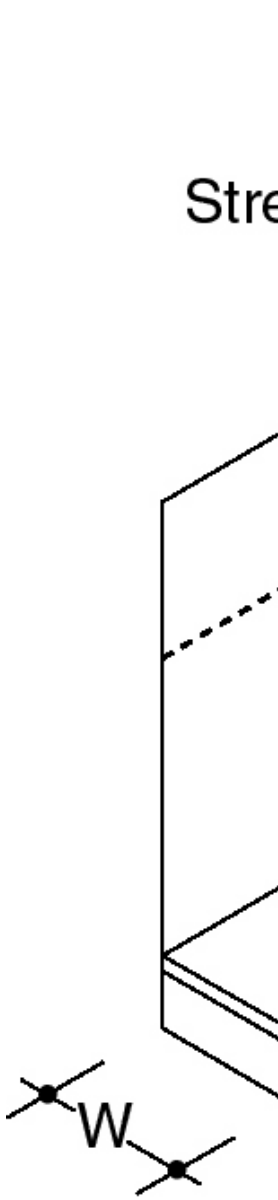

(95-031.5)

Type 6 is appropriate on #zoning lots# of less than 10,000 square feet for providing a "turn around" arrangement of stairs.

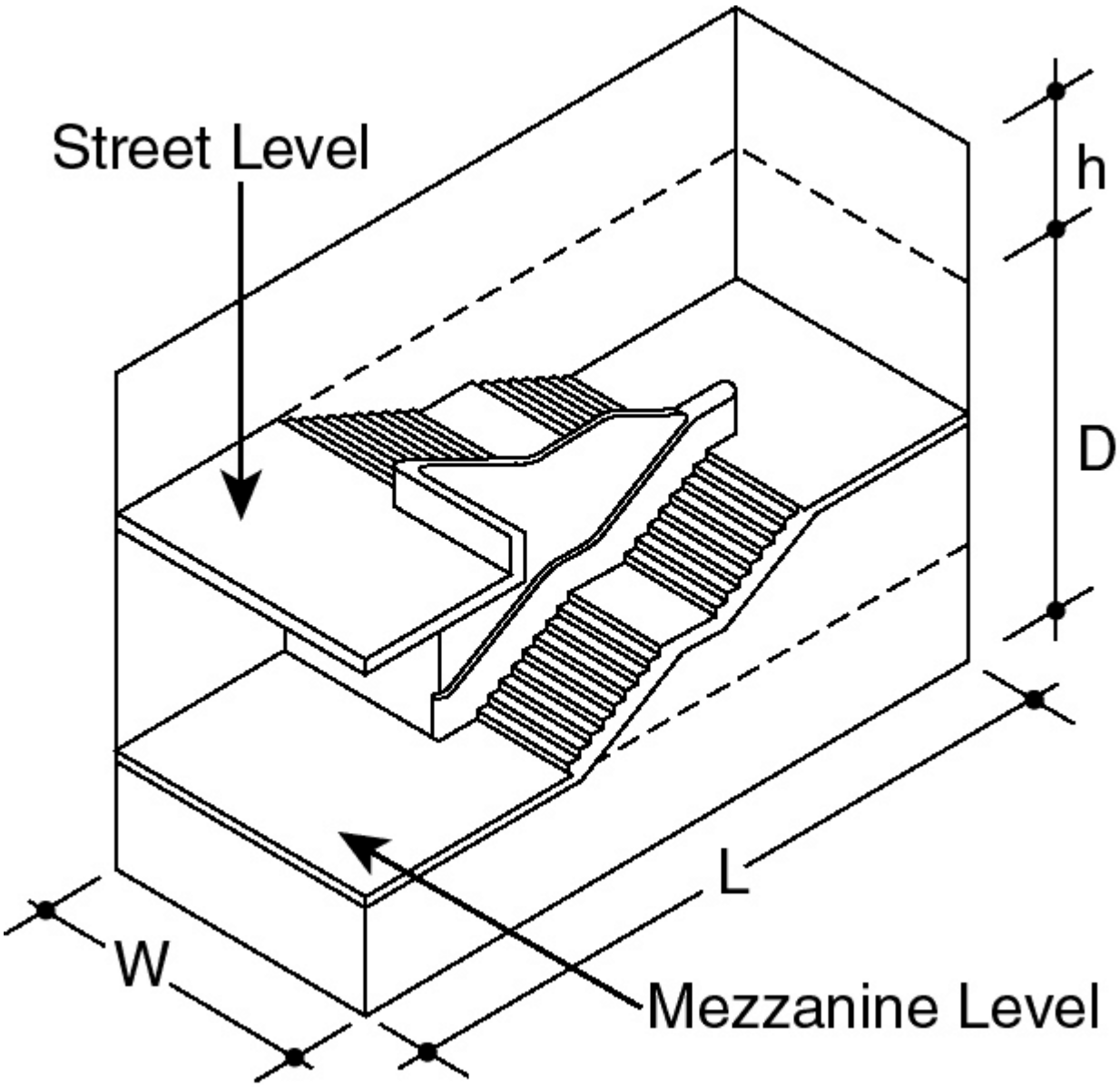

(95-031.6)

Where appropriate, any of these easement types may be used exclusively for light wells.

The Metropolitan Transportation Authority and the Commission, in consultation with the applicant, may make minor modifications of the dimensions of the easement volume type required on the applicant's site and the spacing of #building# columns permitted within the easement volume to facilitate the design and construction of circulation facilities appropriate for the area.

95-032 - Determination of transit easement at other stations

LAST AMENDED
11/30/2017

At the 106th Street, 116th Street and 125th Street stations, a transit easement shall be provided to accommodate, whether singly or in any combination, light wells, stairs, ramps, escalators, elevators, passageways, or ancillary facilities required to support the functioning of subway station or rail mass transit facilities, including, but not limited to, emergency egress or ventilation structures, the Metropolitan Transportation Authority shall, in consultation with the owner of the #zoning lot# and the City Planning Commission, determine the appropriate type of transit easement and reasonable dimensions for such transit easement volume.

95-033 - Location of transit easements

LAST AMENDED
11/30/2017

The transit easement volume may be located within a #building#, in open areas, including #public plazas#, or in areas covered by projected overhangs of a #building#. At least one vertical face of the easement volume shall be at a #front lot line#. The easement volume shall be located on the #zoning lot# as close as possible to the #street# containing the transit line.

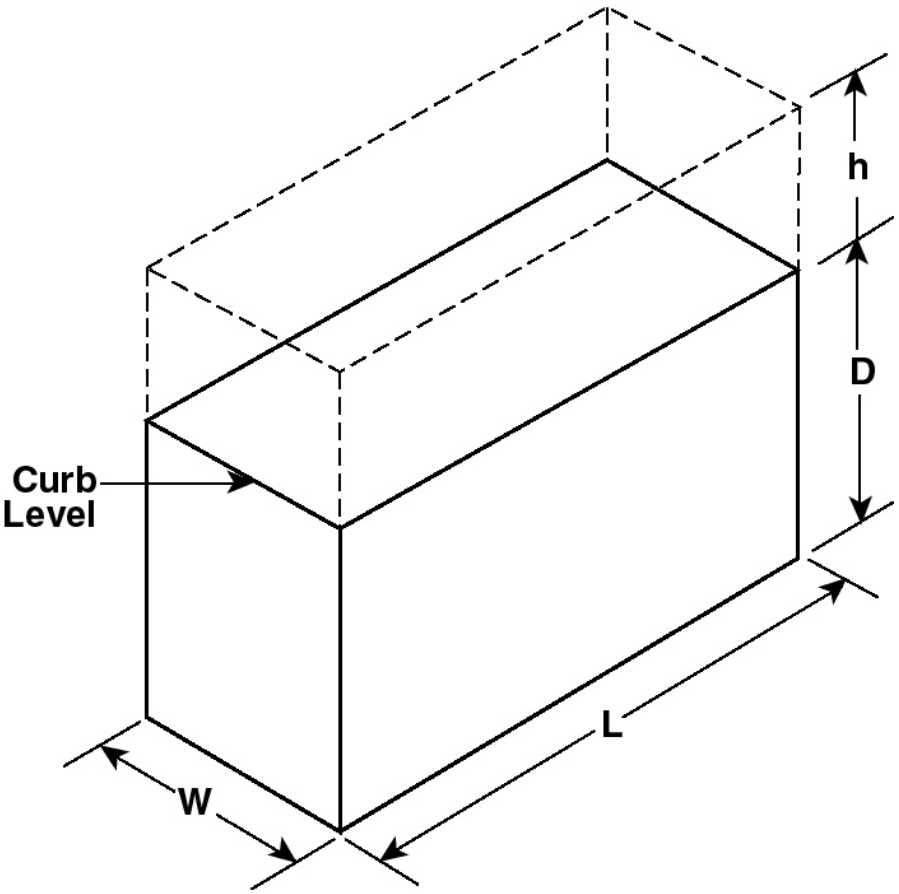

h – Height above curb level

D – Depth below curb level

L – Length

W – Width

TRANSIT EASEMENT VOLUME

(95-032)