Zoning Resolution

THE CITY OF NEW YORK
Eric Adams, Mayor

CITY PLANNING COMMISSION
Daniel R. Garodnick, Chair

33-43 - Maximum Height of Walls and Required Setbacks

File generated by https://zr.planning.nyc.gov on 4/20/2024

33-43 - Maximum Height of Walls and Required Setbacks

LAST AMENDED
2/2/2011

C1 C2 C3 C4 C5 C6 C7 C8

In all districts, as indicated, if the front wall or other portion of a #building or other structure# is located at the #street line# or within the #initial setback distance# set forth in this Section, the height of such front wall or other portion of a #building or other structure# shall not exceed the maximum height above #curb level# set forth in this Section. Above such specified maximum height and beyond the #initial setback distance#, the #building or other structure# shall not penetrate the #sky exposure plane# set forth in this Section. The regulations of this Section shall apply except as otherwise provided in Sections 33-42 (Permitted Obstructions), 33-44 (Alternate Front Setbacks), 33-45 (Tower Regulations), 33-49 (Special Height Limitations), inclusive, 74-85 (Special Height and Setback Regulations) or 85-04 (Modifications of Bulk Regulations).

33-431 - In C1 or C2 Districts with bulk governed by surrounding Residence District

†

LAST AMENDED
12/6/2023

C1-1 C1-2 C1-3 C1-4 C1-5 C2-1 C2-2 C2-3 C2-4 C2-5

In the districts indicated, for #buildings# other than #Quality Housing buildings#, the maximum height of a front wall and the required front setback of a #building or other structure# shall be determined by the #Residence District# within which such #Commercial District# is mapped and, except as otherwise set forth in this Section, shall be as set forth in the following table:

MAXIMUM HEIGHT OF FRONT WALL AND REQUIRED FRONT SETBACKS

#Initial Setback Distance# (in feet)		Maximum Height of a Front Wall or other portion of a #Building or Other Structure# within the #Initial Setback Distance#	#Sky Exposure Plane#			
			Height above the #Street Line# (in feet)	Slope over #Zoning Lot# (Expressed as a Ratio of Vertical Distance to Horizontal Distance)		
				On #Narrow Street#		On #Wide Street#
On #Narrow Street#	On #Wide Street#			Vertical Distance	Horizontal Distance	Vertical Distance	Horizontal Distance
Within R1, R2, R3, R4, R5, R5A or R5B Districts						

20	15	30 feet or two #stories#, whichever is less	30	1	to 1	1	to 1
Within R6 or R7 Districts							
20	15	60 feet or four #stories#, whichever is less	60	2.7	to 1	5.6	to 1
Within R8, R9 or R10 Districts							
20	15	85 feet or six #stories#, whichever is less	85	2.7	to 1	5.6	to 1

However, in accordance with the provisions of Section 32-42 (Location Within Buildings), no #commercial building# or portion thereof occupied by non-#residential uses# listed in Use Groups 6A, 6B, 6C, 7, 8, 9, 14A or 14B shall exceed in height 30 feet or two #stories#, whichever is less.

For #community facility buildings# or #buildings# used for both #community facility# #use# and #commercial# #use#, when mapped within R4, R5, R5A or R5B Districts, the maximum height of a front wall shall be 35 feet or three #stories#, whichever is less, and the height above #street line# shall be 35 feet and, when mapped within R7-2 Districts, the maximum height of a front wall shall be 60 feet or six #stories#, whichever is less.

In C1 or C2 Districts mapped within R1, R2 or R3 Districts in the Borough of Staten Island or in Community District 10 in the Bronx, for #buildings# containing ambulatory diagnostic or treatment health care facilities, as listed in Section 22-14 (Use Group 4), or child care services, as listed under the definition of #school# in Section 12-10 (DEFINITIONS), the maximum height of a front wall or other portion of a #building# within the #initial setback distance# shall be 35 feet, or three #stories#, whichever is less. However, such increased height shall only be permitted beyond 20 feet of a #Residence District# boundary or beyond 20 feet of any portion of a #building# containing a #residential use# located in a #Commercial District#.

33-432 - In other Commercial Districts

†

LAST AMENDED
12/6/2023

C1-6 C1-7 C1-8 C1-9 C2-6 C2-7 C2-8 C3 C4 C5 C6 C7 C8

In the districts indicated, for #buildings# other than #Quality Housing buildings#, the maximum height of a front wall and the required front setback of a #building or other structure#, except as otherwise set forth in this Section, shall be as set forth in the following table:

MAXIMUM HEIGHT OF FRONT WALL AND REQUIRED FRONT SETBACKS

#Initial Setback Distance# (in feet)		Maximum Height of a Front Wall or other portion of a #Building or Other Structure# within the #Initial Setback Distance#	#Sky Exposure Plane#				
			Height above the #Street Line# (in feet)	Slope over #Zoning Lot# (Expressed as a Ratio of Vertical Distance to Horizontal Distance)			
				On #Narrow Street#		On #Wide Street#	
On #Narrow Street#	On #Wide Street#			Vertical Distance	Horizontal Distance	Vertical Distance	Horizontal Distance
Within C3 C4-1 C8-1 Districts							
20	15	30 feet or two #stories#, whichever is less	30	1	to 1	1	to 1
Within C1-6 C2-6 C4-2 C4-3 C4-4 C4-5 C7 C8-2 C8-3 Districts							
20	15	60 feet or four #stories#, whichever is less	60	2.7	to 1	5.6	to 1
Within C1-7 C1-8 C1-9 C2-7 C2-8 C4-2F C4-6 C4-7 C5 C6 C8-4 Districts							
20	15	85 feet or six #stories#, whichever is less	85	2.7	to 1	5.6	to 1

However, in accordance with the provisions of Section 32-42 (Location within Buildings), in C1, C2 or C3 Districts, no #commercial building#, or portion thereof, occupied by non-#residential uses# listed in Use Group 6A, 6B, 6C, 7, 8, 9, 14A or

14B shall exceed in height 30 feet or two #stories#, whichever is less.

In C4-1 or C8-1 Districts, for #community facility buildings# or #buildings# used for both #community facility# and #commercial# #use#, the maximum height of a front wall shall be 35 feet or three #stories#, whichever is less, and the height above #street line# shall be 35 feet.

In C1-6, C2-6, C4-4 or C4-5 Districts, for #community facility buildings# or #buildings# used for both #community facility# and #commercial# #use#, the maximum height of a front wall shall be 60 feet or six #stories#, whichever is less.

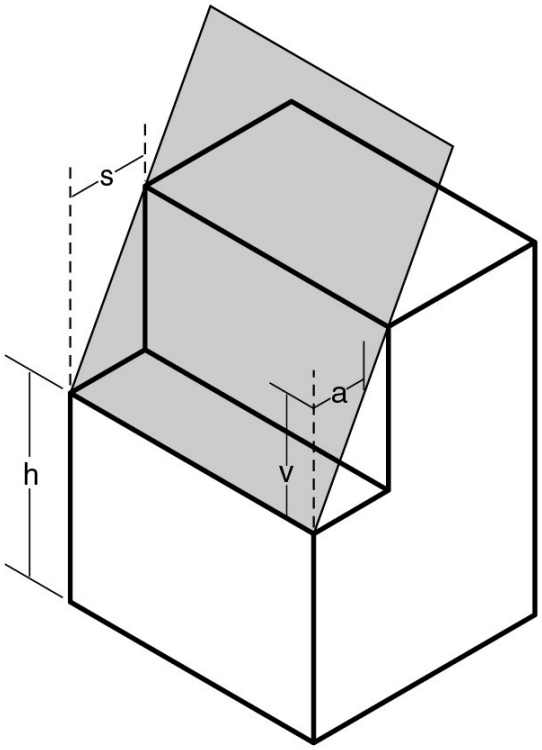

a - Horizontal distance
s - *Initial setback distance*
h - Height of *sky exposure plane* above *street line*
v - Vertical distance

Sky Exposure Plane

SKY EXPOSURE PLANE IN OTHER COMMERCIAL DISTRICTS
(23 - 632, 24 - 522, 33 - 432, 43 - 43)

33-433 - Special height and setback regulations

LAST AMENDED
3/22/2016

(a) Within the boundaries of Community District 7 in the Borough of Manhattan, all #buildings or other structures# located in an R10 equivalent #Commercial Districts# without a letter suffix shall comply with the requirements of Section 23-672 (Special height and setback regulations in R10 Districts within Community District7, Borough of Manhattan).

(b) Within the boundaries of Community District 9 in the Borough of Manhattan, all #buildings# located in R8 Districts

north of West 125th Street shall be #developed# or #enlarged# pursuant to Section 23-674 (Special height and setback regulations for certain sites in Community District 9, Borough of Manhattan).

(c) In C1 or C2 Districts mapped within R5D Districts, all #buildings or other structures# shall comply with the applicable height and setback requirements of Section 23-60.