Zoning Resolution

THE CITY OF NEW YORK
Zohran K. Mamdani, Mayor

CITY PLANNING COMMISSION
Sideya Sherman, Chair

24-55 - Required Side and Rear Setbacks

File generated by https://zr.planning.nyc.gov on 11/23/2026

24-55 - Required Side and Rear Setbacks

LAST AMENDED
12/5/2024

R1 R2 R3 R4 R5 R6 R7 R8 R9 R10 R11 R12

In all districts, as indicated, side and rear setbacks shall be provided as specified in this Section. Unenclosed balconies, subject to the provisions of Section 24-164 (Balconies); and awnings and other sun control devices, decks, #qualifying exterior wall thickness#, parapet walls, roof thickness, solar energy systems up to four feet high, vegetated roofs, and weirs, as set forth in Section 24-51 (Permitted Obstructions), are permitted to project into or over any open areas required by the provisions of this Section.

24-551 - Required side setbacks for tall buildings in low bulk districts

LAST AMENDED
2/2/2011

R1 R2 R3 R4 R5

In the districts indicated, except R5D Districts, no #community facility# portion of any #building# that is more than 35 feet or more than three #stories# above the level of a #side yard#, whichever is lower, shall be nearer to a #side lot line# bounding such #yard# than a distance equal to one-half the height above yard level of such portion of the #building#.

The following are permitted to project into any open area required under the provisions of this Section:

(a) parapet walls, not more than four feet high; and

(b) chimneys or flues, with a total width not exceeding 10 percent of the width of the #building's# walls facing such open area.

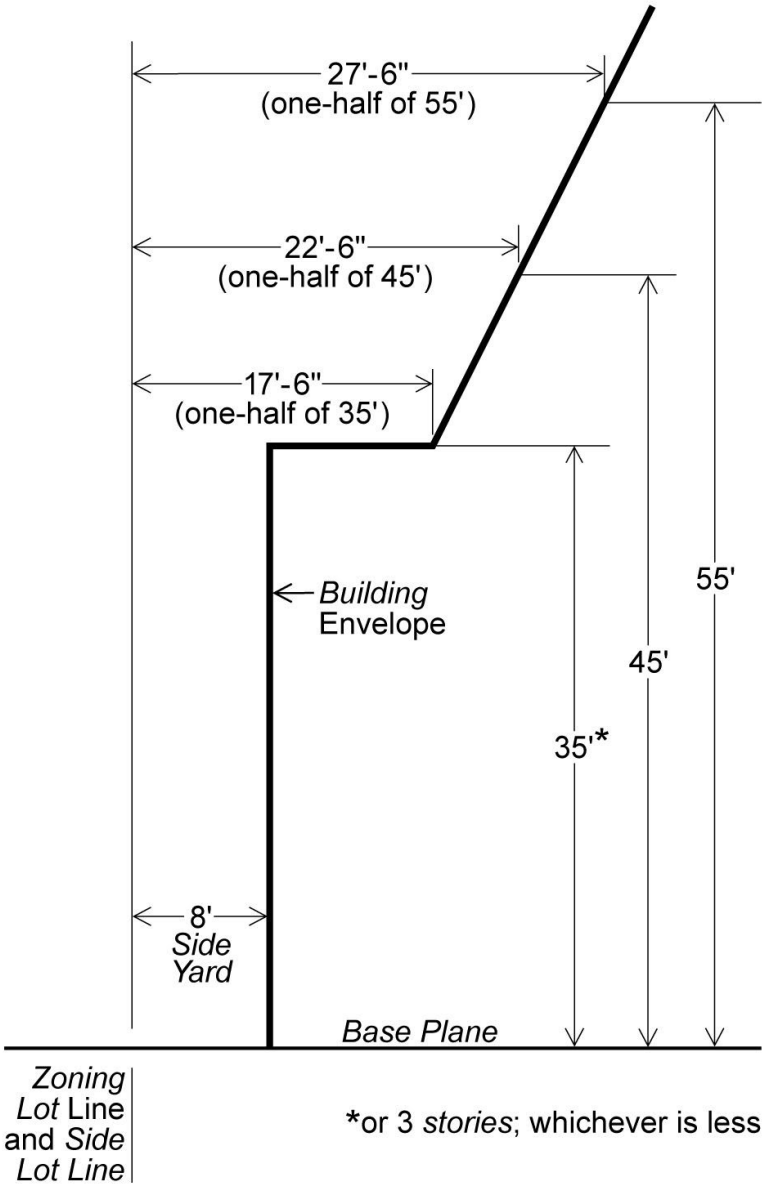

SIDE SETBACK REQUIREMENT

24-552 - Required rear setbacks for tall buildings

LAST AMENDED
12/5/2024

R1 R2 R3 R4 R5 R6 R7 R8 R9 R10 R11 R12

In the districts indicated without a letter suffix, no portion of a #building# more than 125 feet above yard level shall be nearer to a #rear yard line# than 20 feet. However, this provision shall not apply to any portion of a #building# that qualifies as a tower under the provisions of Section 24-54.

In the case of a #through lot# on which a #rear yard equivalent# is provided as set forth in paragraph (a) of Section 24-382, the requirements of this Section shall apply as if such #rear yard equivalent# were two adjoining #rear yards#. If a #rear yard equivalent# is provided as set forth in paragraphs (b) or (c) of Section 24-382, the requirements of this Section shall not apply.

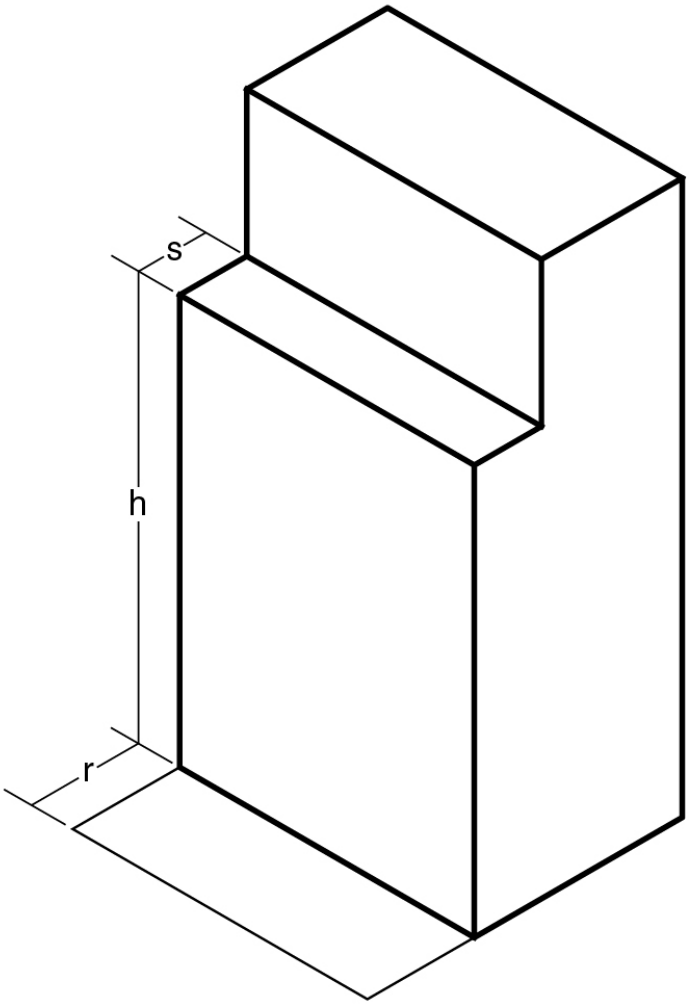

h - Height of wall above *rear yard*

r - Depth of required *rear yard*

s - Depth of required *rear yard* setback

REAR SETBACK FOR TALL BUILDINGS